Lenovo ThinkSystem SR675 V3 Server
Product Guide

The Lenovo ThinkSystem SR675 V3 is a versatile GPU-rich 3U rack server that supports eight double-wide GPUs including the new NVIDIA H100 and L40S Tensor Core GPUs, or the NVIDIA HGX H100 4-GPU offering with NVLink and Lenovo Neptune hybrid liquid-to-air cooling. The server is based on the new AMD EPYC 9004 Series processors (formerly codenamed "Genoa", “Genoa-X” and “Bergamo”).

The server delivers optimal performance for Artificial Intelligence (AI), High Performance Computing (HPC) and graphical workloads across an array of industries. Retail, manufacturing, financial services and healthcare industries can leverage the processing power of the GPUs in the SR675 V3 to extract greater insights and drive innovation utilizing machine learning (ML) and deep learning (DL).

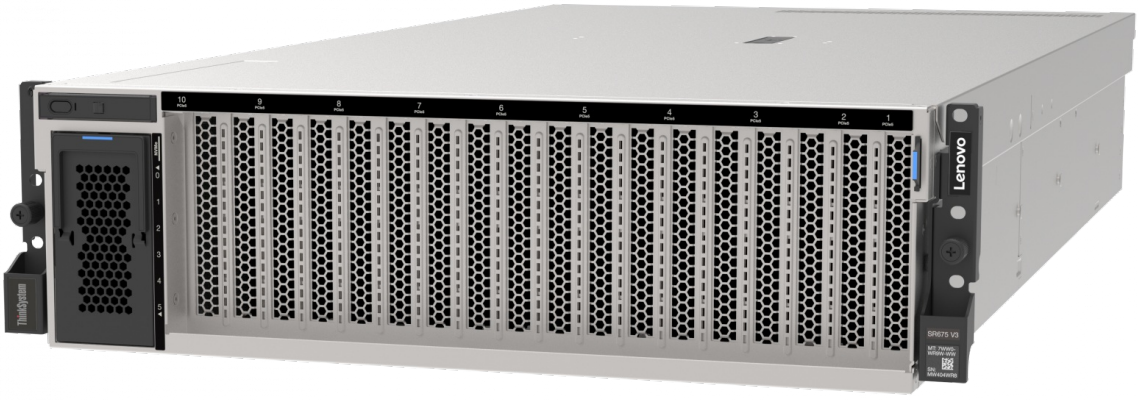

Figure 1. Lenovo ThinkSystem SR675 V3 configured to support eight double-wide GPUs

Did you know?

Traditional air-cooling methods are reaching critical limits. Increases in component power especially on CPU and GPU have resulted in higher energy and infrastructure costs, extremely loud systems and heightened carbon footprints. To combat these challenges and dissipate heat quickly, the SR675 V3 employs Lenovo Neptune liquid-to-air (L2A) hybrid cooling technology. The heat of the NVIDIA HGX H100 GPUs is removed through a unique closed loop liquid-to-air heat exchanger that delivers the benefits of liquid cooling such as higher density, lower power consumption, quiet operation and higher performance without adding plumbing.

Key features

The SR675 V3 features a modular design for ultimate flexibility. Multiple configurations are supported, including:

- One or two 4th Generation AMD EPYC™ Processors
- Up to eight double-wide GPUs with NVLink bridges
- NVIDIA HGX H100 4-GPU with NVLink and Lenovo Neptune hybrid liquid cooling
- AMD Instinct™ MI Series Accelerators
- Choice of front or rear high-speed networking
- Choice of local high speed NVMe storage

There are three different base configurations of the SR675 V3 as shown in the following figure. The configurations determine the type and quantity of GPUs supported as well as the supported drive bays.

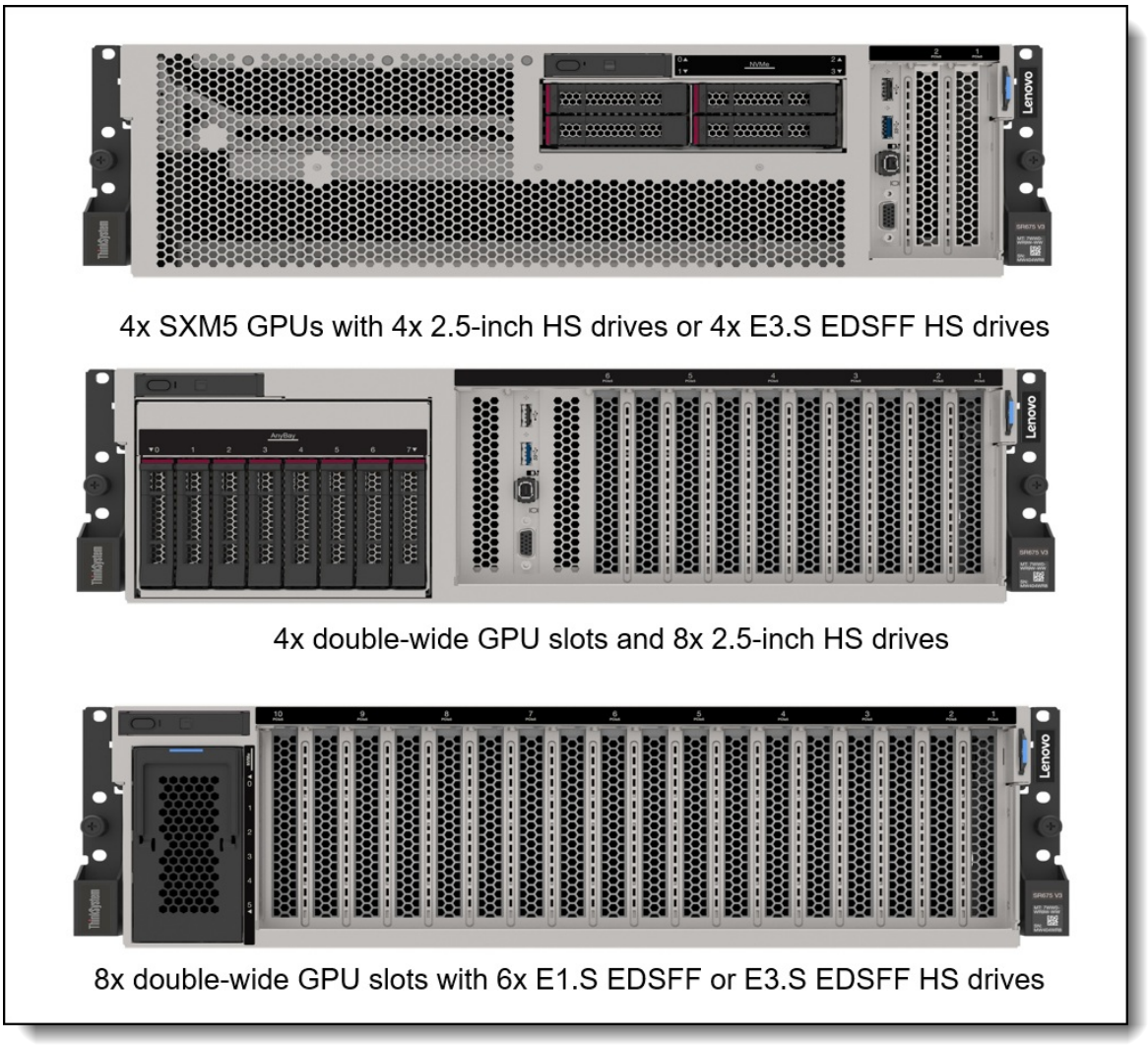

Figure 2. Three base configurations of the ThinkSystem SR675 V3

The SR675 V3 is built on up to two AMD EPYC 9004 Series processors and is designed to support the vast NVIDIA Hooper and Ampere datacenter portfolio and AMD Instinct™ MI Series Accelerators. The SR675 V3 delivers performance optimized for your workload, be it visualization, rendering or computationally intensive HPC and AI.

Scalability and performance

The SR675 V3 offers numerous features to boost performance, improve scalability and reduce costs:

- Supports up to eight high-performance PCIe double-wide GPUs including the new NVIDIA H100 and L40 Tensor Core GPUs.
- Supports the NVIDIA HGX H100 4-GPU complex with NVLink and Lenovo Neptune hybrid liquid cooling.
- Supports NVIDIA NVLink, which offers a GPU-to-GPU direct connection of up to 900 GB/s bandwidth and supported in both SXM5 and double-wide PCIe GPU configurations. NVLink also allows for a larger combined memory footprint for bigger batch sizes or the processing of larger images.
- Supports up to two fourth-generation AMD EPYC 9004 processors
  - Up to 128 cores and 256 threads
  - Core speed of up to 3.5 GHz
  - Nominal TDP rating of up to 360 W, configurable TDP up to 400W
- Supports up to 24 DDR5 memory DIMMs operating at up to 4800 MHz to maximize the performance of the memory subsystem.
- Using 128GB 3DS RDIMMs, the server supports up to 3TB of system memory
- Supports GPU Direct RDMA I/O where high-speed network adapters are directly connected to the GPUs, to maximize I/O performance.
- Supports GPU Direct Storage where NVMe drives are directly connected to the GPUs, to maximize storage performance.
- A variety of slot configurations available, depending on the GPU and NVMe storage configuration selected:
  - Two front PCIe 5.0 x16 slots
  - Four rear PCIe 5.0 x16 slots (configuration dependent)
  - One rear OCP 3.0 slot, PCIe 4.0 x8 or x16
- Supports a variety of internal storage configurations:
  - 8x 2.5-inch hot-swap SSDs, with SAS, SATA or NVMe interfaces
  - 6x EDSFF E1.S hot-swap NVMe SSDs
  - 4x EDSFF E3.S hot-swap NVMe SSDs
- Supports NVMe drives without oversubscription of PCIe lanes (1:1 connectivity). The use of NVMe drives maximizes drive I/O performance, in terms of throughput, bandwidth, and latency.
- Supports high-speed RAID controllers from Lenovo and Broadcom providing 12 Gb SAS connectivity to the drive backplanes. A variety of PCIe 3.0 and PCIe 4.0 RAID adapters are available.
- Supports M.2 drives for convenient operating system boot functions. Available M.2 adapters support either one M.2 drive or two M.2 drives in a RAID 1 configuration for performance and reliability.
- The server has an industry-standard OCP 3.0 small form factor (SFF) slot, with a PCIe 4.0 interface, up to x16, supporting a variety of Ethernet network adapters. A simple-swap mechanism with a thumbscrew and pull-tab enables tool-less installation and removal of the adapter. The adapter supports shared BMC network sideband connectivity to enable out-of-band systems management.
- The server offers PCI Express 5.0 I/O expansion capabilities that doubles the theoretical maximum bandwidth of PCIe 4.0 (32GT/s in each direction for PCIe 5.0, compared to 16 GT/s with PCIe 4.0). A PCIe 5.0 x16 slot provides 63 GB/s bandwidth, enough to support a 200GbE network connection.
- The server offers a choice of PCIe 5.0 x16 full-height slots, depending on the GPU and NVMe connections selected. Available slots are two front slots and four rear slots, plus the slot dedicated to the OCP adapter. The flexibility of configuration ensures you can get the PCIe resources you need for a high-performance HPC/AI implementation.

Availability and serviceability

The SR675 V3 provides many features to simplify serviceability and increase system uptime:

- Designed to run 24 hours a day, 7 days a week.
- The server offers hot-swap drives, supporting RAID redundancy for data protection and greater system uptime.
- Available M.2 RAID Boot Adapters support RAID-1 which can enable two NVMe M.2 drives to be configured as a redundant pair.
- The server has four hot-swap power supplies and five simple-swap redundant fans to provide availability for business-critical applications. N+N, N+0 (non-redundant), N+1 configurations available.
- The Liquid Assisted Cooling Module on the configuration with SXM5 GPUs employs four redundant low-pressure pumps to circulate the liquid to cool the GPUs.
- The light path diagnostics feature uses LEDs to lead the technician to failed (or failing) components, which simplifies servicing, speeds up problem resolution, and helps improve system availability.
- Solid-state drives (SSDs) offer more reliability and performance than traditional mechanical HDDs for greater uptime.
- Proactive Platform Alerts (including PFA and SMART alerts): Processors, voltage regulators, memory, internal storage (SAS/SATA SSDs, NVMe SSDs, M.2 storage, flash storage adapters), fans, power supplies, RAID controllers, server ambient and subcomponent temperatures. Alerts can be surfaced through the XClarity Controller to managers such as Lenovo XClarity Administrator, VMware vCenter, and Microsoft System Center. These proactive alerts let you take appropriate actions in advance of possible failure, thereby increasing server uptime and application availability.
- The built-in XClarity Controller continuously monitors system parameters, triggers alerts, and performs recovery actions in case of failures to minimize downtime.
- Built-in diagnostics in UEFI, using Lenovo XClarity Provisioning Manager, speed up troubleshooting tasks to reduce service time.
- Lenovo XClarity Provisioning Manager supports diagnostics and can save service data to a USB key drive or remote CIFS share folder for troubleshooting and reduce service time.
- Auto restart in the event of a momentary loss of AC power (based on power policy setting in the XClarity Controller service processor)
- Offers a diagnostics port on the front of the server to allow you to attach an external diagnostics handset for enhanced systems management capabilities.
- Support for the XClarity Administrator Mobile app running on a supported smartphone or tablet and connected to the server through the service-enabled USB port, enables additional local systems management functions.
- Three-year or one-year customer-replaceable unit and onsite limited warranty (varies by geography), 9 x 5 next business day. Optional service upgrades are available.

Manageability and security

Systems management features simplify local and remote management of the SR675 V3:

- Lenovo XClarity Controller 2 (XCC2) monitors server availability and performs remote management. XCC2 Platinum is standard, which enables remote KVM, the mounting of remote media files (ISO and IMG image files), boot capture, and power capping.
- Lenovo XClarity Administrator offers comprehensive hardware management tools that help to increase uptime, reduce costs and improve productivity through advanced server management capabilities.
- UEFI-based Lenovo XClarity Provisioning Manager, accessible from F1 during boot, provides system inventory information, graphical UEFI Setup, platform update function, RAID Setup wizard, operating system installation function, and diagnostic functions.
- Support for Lenovo XClarity Energy Manager, which captures real-time power and temperature data from the server and provides automated controls to lower energy costs.

- Lenovo HPC & AI Software Stack provides our HPC customers you with a fully tested and supported open-source software stack to enable your administrators and users with for the most effective and environmentally sustainable consumption of Lenovo supercomputing capabilities.
- Our Confluent management system and Lenovo Intelligent Computing Orchestration (LiCO) web portal provides an interface designed to abstract the users from the complexity of HPC cluster orchestration and AI workloads management, making open-source HPC software consumable for every customer.
- An integrated industry-standard Unified Extensible Firmware Interface (UEFI) enables improved setup, configuration, and updates, and simplifies error handling.
- Support for industry standard management protocols, IPMI 2.0, SNMP 3.0, Redfish REST API, serial console via IPMI.
- An integrated hardware Trusted Platform Module (TPM) supporting TPM 2.0 enables advanced cryptographic functionality, such as digital signatures and remote attestation.
- Administrator and power-on passwords help protect from unauthorized access to the server.
- Supports Secure Boot to ensure only a digitally signed operating system can be used. Supported with SSDs, as well as M.2 drives.
- Industry-standard Advanced Encryption Standard (AES) NI support for faster, stronger encryption.
- An included chassis intrusion switch provides an additional physical security feature.

Energy efficiency

The SR675 V3 offers the following energy-efficiency features to save energy, reduce operational costs, and increase energy availability:

- Energy-efficient system board components help lower operational costs.
- High-efficiency power supplies with 80 PLUS Titanium or Platinum certification.
- Solid-state drives (SSDs) consume as much as 80% less power than traditional spinning 2.5-inch HDDs.
- Optional Lenovo XClarity Energy Manager provides advanced data center power notification, analysis, and policy-based management to help achieve lower heat output and reduced cooling needs.

Components and connectors

The following figure shows the main components on the front of the configuration with 4x SXM5 GPUs and 4x 2.5-inch hot-swap drives.

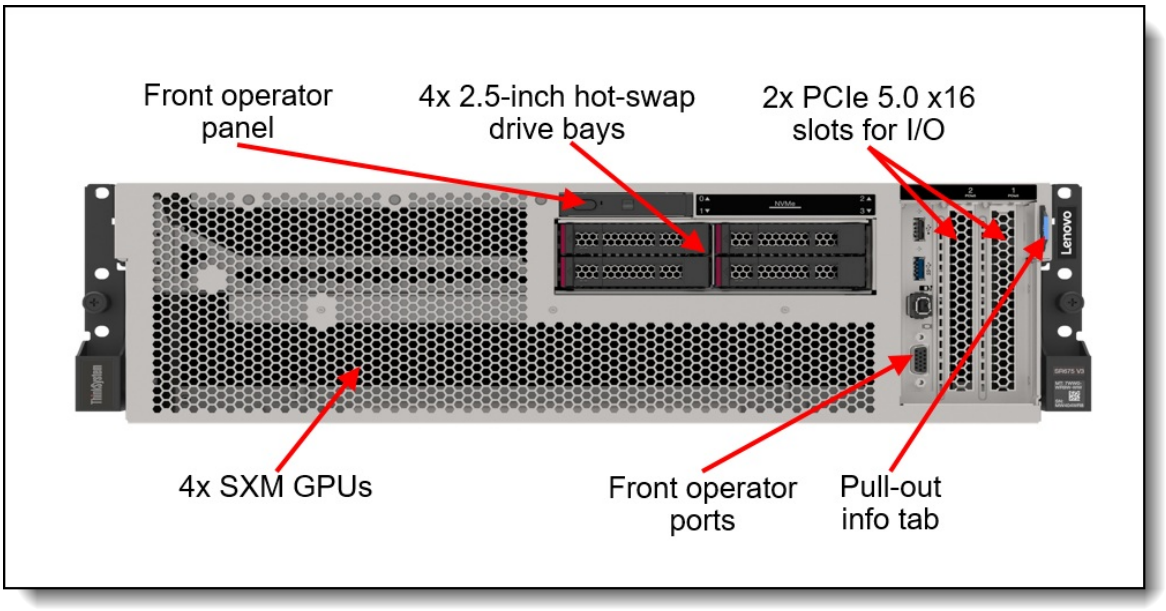

Figure 3. Front view of the SR675 V3 with 4x SXM5 GPUs and 4x 2.5-inch hot-swap drives

The following figure shows the main components on the front of the configuration with 4x double-wide PCIe GPUs and 8x 2.5-inch hot-swap drives.

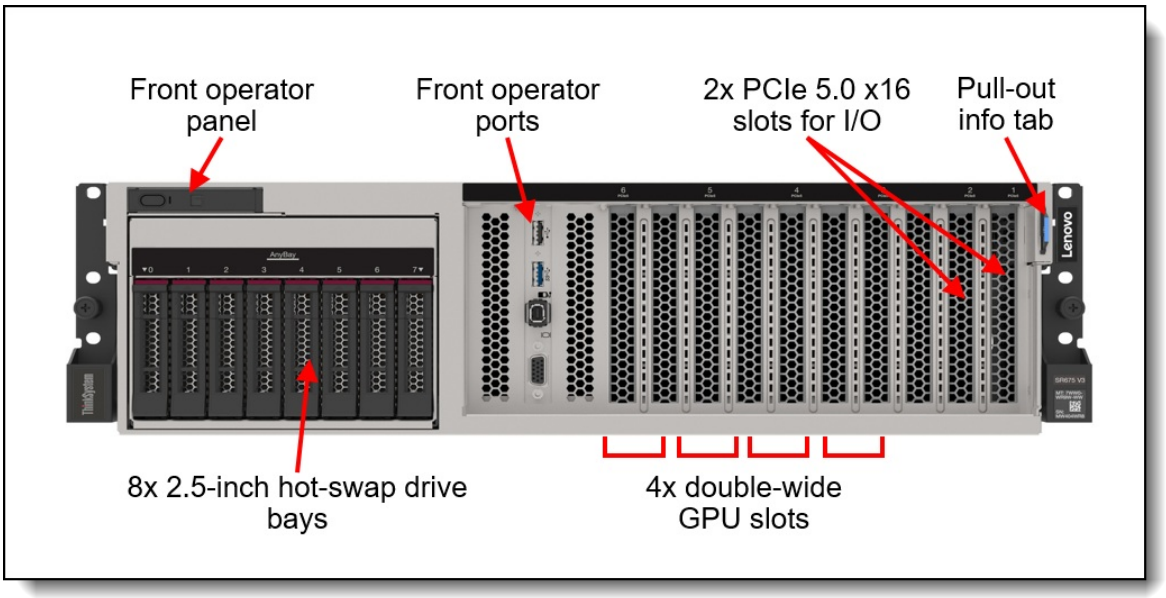

Figure 4. Front view of the SR675 V3 with 4x double-wide PCIe GPUs and 8x 2.5-inch hot-swap drives

The following figure shows the main components on the front of the configuration with 8x double-wide PCIe GPUs and 6x E1.S EDSFF hot-swap drives. In this configuration, there are two front I/O PCIe slots.

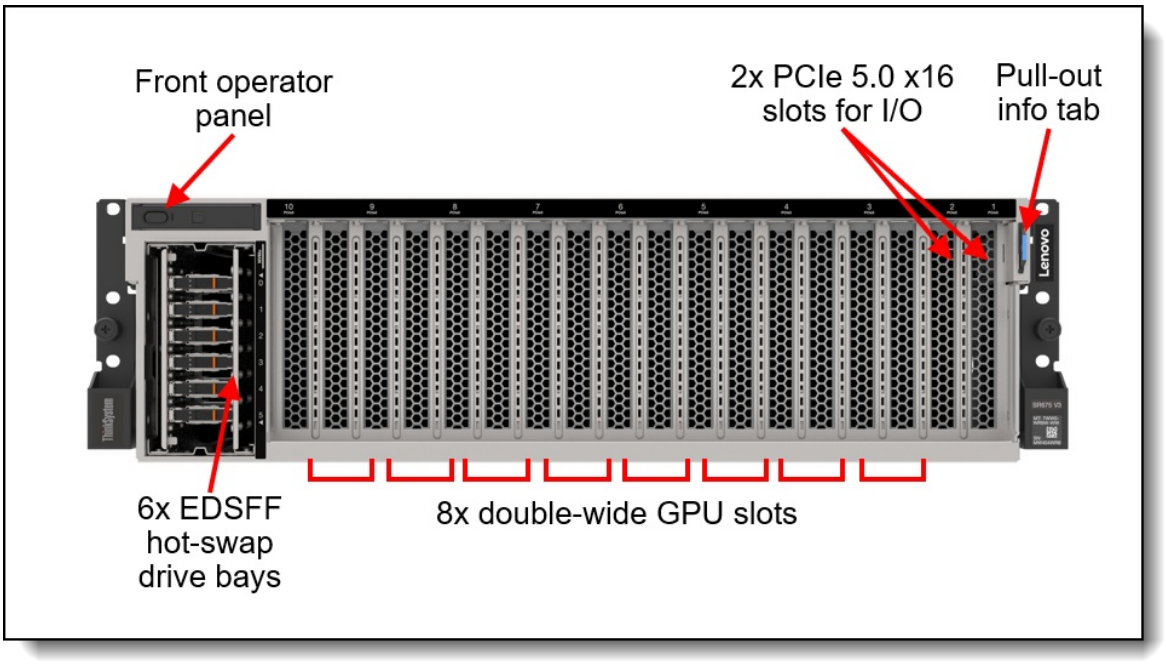

Figure 5. Front view of the SR675 V3 with 8x double-wide PCIe GPUs, 6x E1.S EDSFF hot-swap drives, and front I/O

The following figure shows the components visible from the rear of the server. Note that not all configurations support PCIe slots at the rear of the server

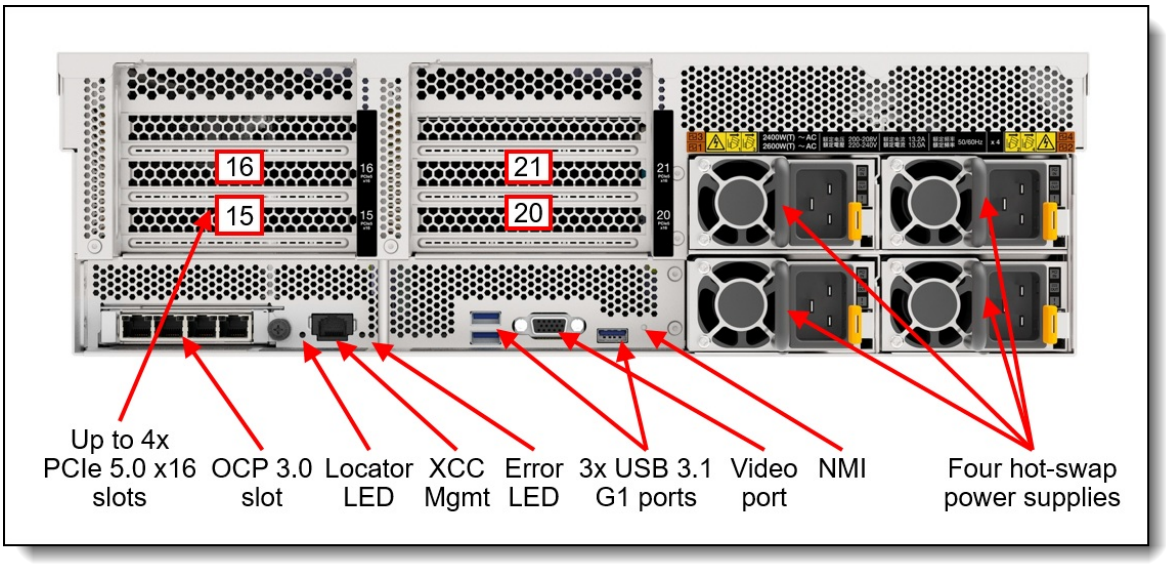

Figure 6. Rear view of the ThinkSystem SR675 V3

The following figure shows the internals of the server with four double-wide GPUs installed.

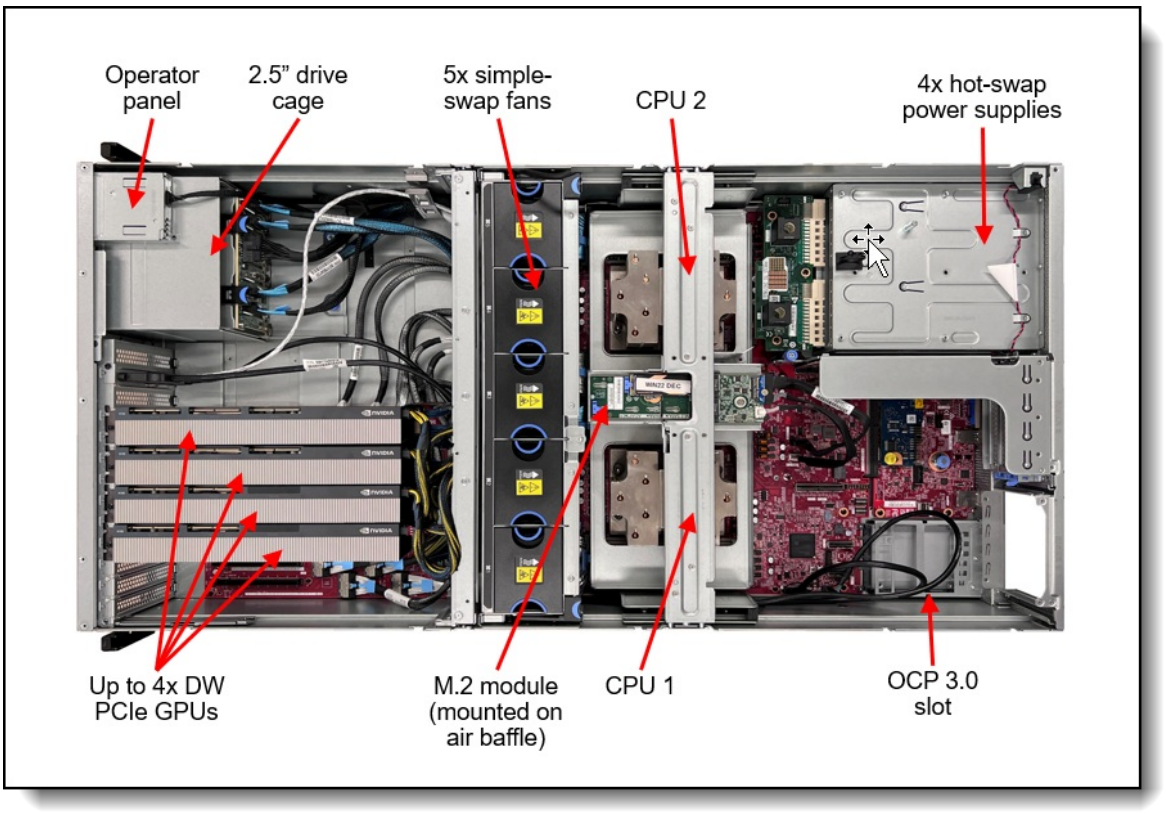

Figure 7. Internal view of the SR675 V3 with 4x double-wide PCIe GPUs and 8x 2.5-inch drives

The following figure shows the internals of the server with eight double-wide GPUs installed (four removed to show the PCIe switch board underneath).

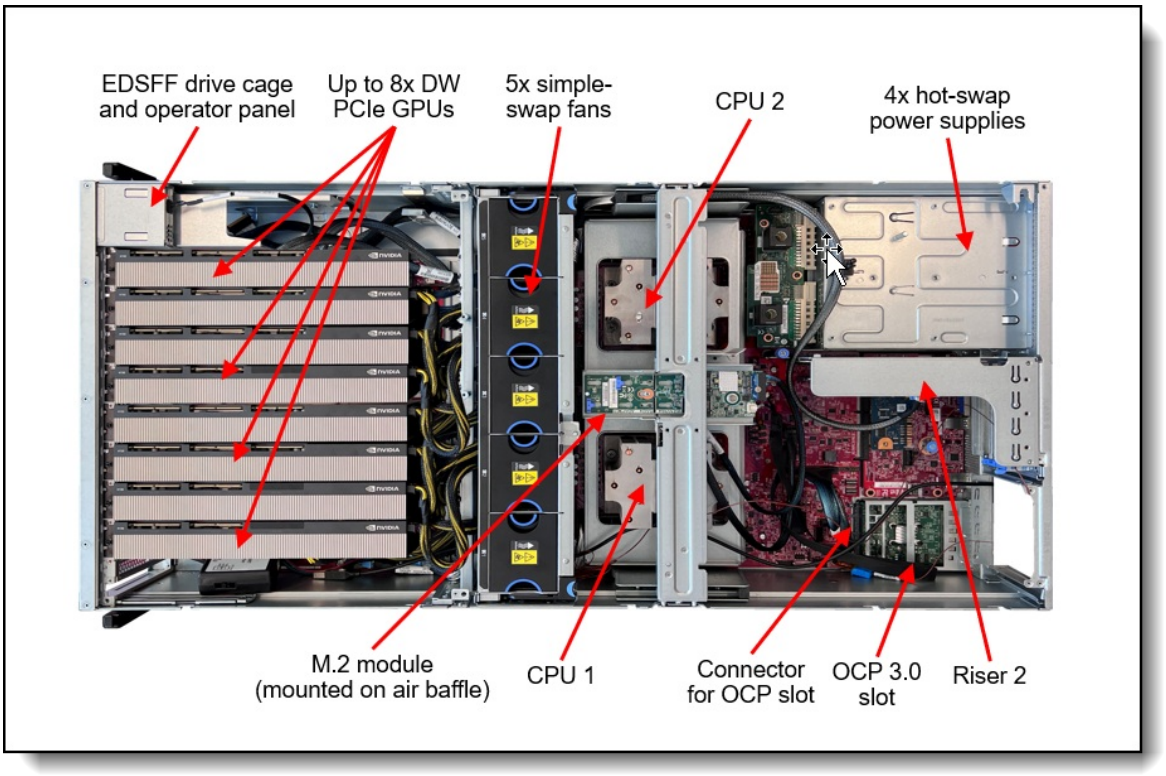

Figure 8. Internal view of the SR675 V3 with 8x double-wide PCIe GPUs and 6x EDSFF hot-swap drives

System architecture

The following figure shows the architectural block diagram of the SR675 V3, showing the major components and their connections.

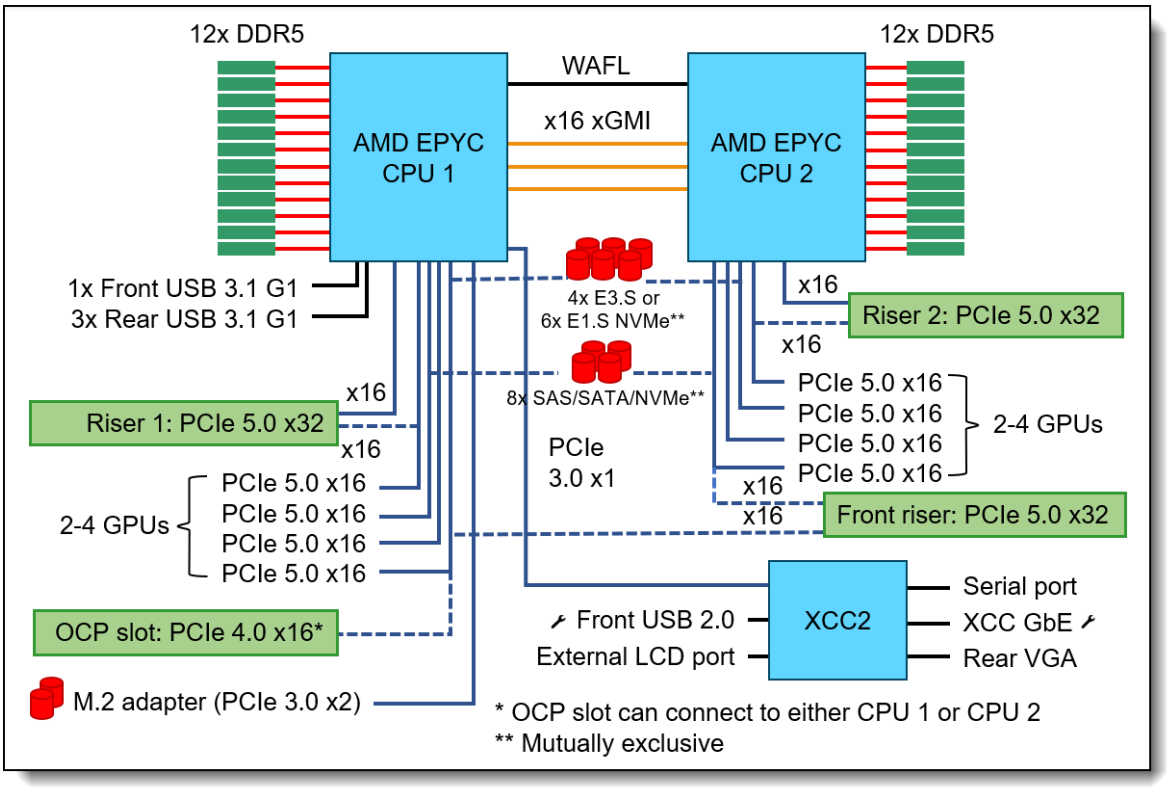

Figure 9. SR675 V3 system architectural block diagram

Standard specifications

The following table lists the standard specifications.

Table 1. Standard specifications

Components	Specification
Machine types	7D9Q - 1 year warranty 7D9R - 3 year warranty
Form factor	3U rack
Processor	Up to two AMD EPYC 9004 Series processors (formerly codenamed "Genoa", “Genoa-X” and “Bergamo”) per node. Supports processors up to 128 cores, core speeds of up to 3.5 GHz, and TDP ratings of up to 360W, cTDP up to 400W. Supports PCIe 5.0 for high performance I/O.
Chipset	Not applicable
Memory	24 DIMM slots with two processors (12 DIMM slots per processor) per node. Each processor has 12 memory channels, with 1 DIMM per channel (DPC). Lenovo TruDDR5 RDIMMs, 3DS RDIMMs, and Optimized DIMMs are supported, up to 4800 MHz
Persistent memory	Not supported
Memory maximum	Up to 3TB per node with 24x 128GB 3DS RDIMMs

Components	Specification
Memory RAS	Chipkill (with x4 DIMM), ECC, DRAM patrol + redirect scrubbers, DRAM address/command parity, DRAM read and write data CRC, DRAM runtime post-package repair, failed DIMM identification, DRAM leaky bucket error counters.

Disk drive bays	Either 2.5-inch or EDSFF drives, depending on the configuration:
	• Configurations with SXM5 GPUs (SXM5 model):
	  ◦ 4x 2.5-inch hot-swap NVMe drive bays
	  ◦ 4x EDSFF E3.S 1T hot-swap NVMe drive bays
	• Configurations with 4x double-wide GPUs (4-DW GPU model):
	  ◦ 8x 2.5-inch hot-swap AnyBay drive bays supporting SAS, SATA or NVMe SSDs
	• Configurations with 8x double-wide GPUs (8-DW GPU model):
	  ◦ 6x EDSFF E1.S 5.9 mm hot-swap NVMe drive bays
	  ◦ 4x EDSFF E3.S 1T hot-swap NVMe drive bays
	The server also supports an internal M.2 adapter supporting up to two M.2 drives. (optional RAID). See the Internal storage section for details.

Maximum internal storage	• SXM5 model:
	  ◦ 61.44 TB using 4x 15.36 TB 2.5-inch NVMe SSDs
	  ◦ 61.44 TB using 4x 15.36 TB EDSFF E3.S 1T NVMe SSDs
	• 4-DW GPU model:
	  ◦ 245.76 TB using 8x 30.72 TB 2.5-inch SAS SSDs
	  ◦ 122.88 TB using 8x 15.36 TB 2.5-inch NVMe SSDs
	• 8-DW GPU model:
	  ◦ 46.08 TB using 6x 7.68 TB EDSFF E1.S NVMe SSDs
	  ◦ 61.44 TB using 4x 15.36 TB EDSFF E3.S 1T NVMe SSDs

Storage controller	• 12 Gb SAS/SATA RAID adapters • 12 Gb SAS/SATA non-RAID HBAs (JBOD support only)
Optical drive bays	No internal optical drive.
Tape drive bays	No internal backup drive.
Network interfaces	OCP 3.0 SFF slot with flexible PCIe 4.0 x8 or x16 host interface, available depending on the server configurations: • SXM5 model: Supported, dependent on the storage configuration • 4-DW GPU model: Supported, dependent on the configuration of PCIe slots • 8-DW GPU model: Supported, dependent on the configuration of PCIe slots The OCP slot supports a variety of 2-port and 4-port adapters with 1GbE, 10GbE and 25GbE network connectivity. One port can optionally be shared with the XClarity Controller 2 (XCC2) management processor for Wake-on-LAN and NC-SI support.

Components	Specification
PCI Expansion slots	Maximum 14 expansion slots + 1 OCP (limited by available PCIe lanes), depending on the GPU and drive bay configuration selected. • 8x DW GPU slots (x16 Front) • 2x I/O slots (x16 Front) • 2x I/O slot riser1 (rear x16) • 2x I/O slot riser2 (rear x16) • 1x OCP (rear x16) – Gen 4 max

GPU support	Supports up to 8x double-wide PCIe GPUs or 4x SXM5 GPUs, depending on the configuration:
	• SXM5 model:
	  ◦ 4x SXM5 GPUs (@600W/GPU) with Lenovo Neptune liquid-to-air cooling and 4x 2.5-inch drive bays or 4x EDSFF E3.S 1T NVMe SSDs
	• 4-DW GPU model:
	  ◦ 4x double-wide GPUs with 8x 2.5-inch drive bays
	• 8-DW GPU model:
	  ◦ 8x double-wide GPUs with 6x EDSFF E1.S NVMe SSDs or 4x EDSFF E3.S 1T NVMe SSDs

Ports	Front: • SXM5 model, 4-DW GPU model, and 8-DW GPU model with rear I/O slots: 1x USB 3.1 G1 (5 Gb/s) port, 1x USB 2.0 port (also for XCC local management), External diagnostics port, VGA port. • 8-DW GPU model with front I/O slots: No front ports Rear: • All models: 3x USB 3.1 G1 (5 Gb/s) ports, 1x VGA video port, 1x RJ-45 1GbE systems management port for XCC remote management. • Models with rear I/O slots: Optional DB-9 COM serial port (installs in a slot). Internal: • All models: 1x USB 3.1 G1 connector for operating system or license key purposes
Cooling	5x dual-rotor simple-swap 80 mm fans, configuration dependent. Fans are N+1 rotor redundant, tolerating a single-rotor failure. One fan integrated in each power supply.
Power supply	Up to four 1U hot-swap CFFv4 AC power supplies with 80 PLUS Titanium or 80 PLUS Platinum certification. 1800 W, 2400 W or 2600 W AC options, supporting 220 V AC. In China only, power supplies also support 240 V DC. Minimum two power supply configuration. Supports N+N, N+0, N+1 policies with OVS always ON. • SXM5 model: supports 1800W, 2400W and 2600W • 4-DW GPU model: supports 1800W, 2400W and 2600W • 8-DW GPU model: supports 1800W, 2400W and 2600W Note: Redundancy is not a user selectable option but it is preset based on number of power supplies and configuration.

Components	Specification
Video	Graphics controller embedded in BMC (AST2600) • G200e graphics with 16 MB memory and 2D hardware accelerator. • Maximum resolution is 1920x1200 32bpp at 60Hz.
Hot-swap parts	Drives and power supplies.
Systems management	Operator panel with status LEDs. On SXM5 and 4-DW GPU models, External Diagnostics Handset with LCD display (not available in 8-DW GPU models). XClarity Controller 2 (XCC2) embedded management, XClarity Administrator centralized infrastructure delivery, XClarity Integrator plugins, and XClarity Energy Manager centralized server power management. XCC Platinum which enables remote control functions and other features.
Security features	Chassis intrusion switch, Power-on password, administrator's password, Trusted Platform Module (TPM), supporting TPM 2.0. In China only, optional Nationz TPM 2.0.
Operating systems supported	Microsoft Windows Server, Red Hat Enterprise Linux, SUSE Linux Enterprise Server, VMware ESXi, Canonical Ubuntu. See the Operating system support section for specifics.
Limited warranty	Three-year or one-year (model dependent) customer-replaceable unit and onsite limited warranty with 9x5 next business day (NBD).
Service and support	Optional service upgrades are available through Lenovo Services: 4-hour or 2-hour response time, 6-hour fix time, 1-year or 2-year warranty extension, software support for Lenovo hardware and some third-party applications.
Dimensions	Width: 448 mm (17.6 in.), height: 131 mm (5.2 in.), depth: 892 mm (35.1 in.). SeePhysical and electrical specifications for details.
Weight	Approximate weight, dependent on the configuration selected: • SXM5 model: 39.5 kg (87 lb) • 4-DW GPU model: 36.7 kg (81 lb) • 8-DW GPU model: 39 kg (86 lb)

Models

ThinkSystem SR675 V3 models can be configured by using the Lenovo Data Center Solution Configurator (DCSC).

Configure-to-order (CTO) models are used to create models with factory-integrated server customizations. For CTO models, two base CTO models are available for the SR675 V3 as listed in the following table, CTO1WW and CTOLWW:

- The CTO1WW base CTO model is for general business and is selectable by choosing **General Purpose** mode in DCSC.
- The CTOLWW base model is intended for High Performance Computing (HPC) and Artificial Intelligence (AI) configurations and solutions, including configurations for Lenovo Scalable Infrastructure (LeSI), and is enabled using either the **HPC & AI LeSI Solutions** mode or **HPC & AI Hardware** mode in DCSC. CTOLWW configurations can also be built using System x and Cluster Solutions Configurator (x-config).

Preconfigured server models may also be available for the SR675 V3, however these are region-specific; that is, each region may define their own server models, and not all server models are available in every region.

The following table lists the base CTO models of the ThinkSystem SR675 V3 server.

Table 2. Base CTO models

Machine Type/Model General purpose	Machine Type/Model for HPC and AI	Description
7D9RCTO1WW	7D9RCTOLWW	ThinkSystem SR675 V3 – 3-year Warranty
7D9QCTO1WW	7D9QCTOLWW	ThinkSystem SR675 V3 – 1-year Warranty

Models of the SR675 V3 are defined based on the type of GPUs installed in the front portion of the server. For models, the feature codes for these chassis bases are as listed in the following table.

Table 3. Chassis base feature codes

Feature code	Description	Purpose
BR7E	ThinkSystem SR675 V3 HGX NVLink GPU Base	**SXM5 model** (4x SXM5 module GPUs with 4x 2.5-inch or 4x E3.S EDFFS drive bays)
BR7G	ThinkSystem SR675 V3 4DW PCIe GPU Base	**4-DW GPU model** (4x double-wide PCIe GPUs with 8x 2.5-inch drive bays)
BR7F	ThinkSystem SR675 V3 8DW PCIe GPU Base	**8-DW GPU model** (8x double-wide PCIe GPUs with EDSFF drive bays)

Configurations

The SR675 V3 supports specific combinations of GPUs, riser cards and internal storage, as listed in the following table.

Additional combinations may be supported via the Special Bid process. Contact your Lenovo representative for more information. The following tables list supported configurations.

Table 4. Supported configurations with 4DW GPU model

Configuration	Config Number	CPU	GPU	Storage	I/O Front	I/O Rear
4DW x16 GPU Gen5 Pass-through, Front I/O, & 8x SAS/SATA/NVMe Storage	1	2P	4DW x16 FHFL 350W PCIe Gen5	8x SATA 6Gbps / SAS 12Gbps / NVMe PCIe Gen5	2 x16 PCIe Gen5 (FHFL)	OCP (x16 PCIe Gen4) Riser 2: 1 x16 PCIe Gen5 (RAID/HBA for SAS/SATA)
	2	2P	4DW x16 FHFL 350W PCIe Gen5	8x SATA 6Gbps / SAS 12Gbps / NVMe PCIe Gen5	2 x16 PCIe Gen5 (FHFL)	Riser 1: 1 x16 PCIe Gen5, Riser 2: 1 x16 PCIe Gen5 (RAID/HBA for SAS/SATA)
4DW x16 GPU with PCIe Switch: Front & Rear I/O, & Tri-Mode or AnyBay Storage	5	1P	4DW x16 FHFL 350W PCIe Gen5	8x SATA 6Gbps / SAS 12Gbps / U.3 (Tri-mode)	2 x16 PCIe Gen5 (FHFL)	OCP (x16 PCIe Gen4), Riser 1: 1 x16 PCIe Gen5, 1 x16 PCIe Gen5 (RAID/HBA for Tri-Mode)
	14	1P	4DW x16 FHFL 350W PCIe Gen5	8x SATA 6Gbps / SAS 12Gbps / 4x NVMe PCIe Gen5	2 x16 PCIe Gen5 (FHFL)	OCP (x16 PCIe Gen4), Riser 1: 1 x16 PCIe Gen5, 1 x16 PCIe Gen5 (RAID/HBA)

Table 5. Supported configurations with 8DW GPU model

Configuration	Config Number	CPU	GPU	Storage	I/O Front	I/O Rear
8DW x8 FHFL 350W PCIe Gen5, Front I/O, & EDSFF Storage	3	2P	8DW x8 FHFL 350W PCIe Gen5	6x E1.S (5.9mm) (PCIe Gen4)	2 x16 PCIe Gen5 (FHFL)	OCP (x16 PCIe Gen4) Riser 2: 1 x16 PCIe Gen5, 1 x8 PCIe Gen5
	4	2P	8DW x8 FHFL 350W PCIe Gen5	6x E1.S (5.9mm) (PCIe Gen4)	2 x16 PCIe Gen5 (FHFL)	Riser 1: 1 x16 PCIe Gen5 Riser 2: 1 x16 PCIe Gen5, 1 x8 PCIe Gen5
8DW x16 GPU with Gen5 Switch, Front I/O, & EDSFF Storage	6	2P	8DW x16 FHFL 350W PCIe Gen5	6x E1.S (5.9mm) (PCIe Gen4)	2 x16 PCIe Gen5 (FHFL)	OCP (x16 PCIe Gen4), Riser 1: 1 x16 PCIe Gen5, 1 x16 PCIe Gen5, Riser 2: 1 x16 PCIe Gen5, 1 x16 PCIe Gen5
8DW x8 FHFL 350W PCIe Gen5, Front I/O, & EDSFF Storage	22	2P	8DW x8 FHFL 350W PCIe Gen5	4x E3.S 1T (PCIe Gen5)	2x x16 PCIe Gen5 (FHFL)	OCP (x16 PCIe Gen4) Riser 2: 1x x16 PCIe Gen 5, 1x x8 PCIe Gen4 (Slot 21)
	23	2P	8DW x8 FHFL 350W PCIe Gen5	4x E3.S 1T (PCIe Gen5)	2x x16 PCIe Gen5 (FHFL)	Riser 1: One x16 PCIe Gen5 Riser 2: 1x x16 PCIe Gen 5, 1x x8 PCIe Gen4 (Slot 21)
8DW x16 GPU w/ Gen5 Switch, Front I/O, & EDSFF Storage	24	2P	8x DW x16 FHFL 350W PCIe Gen5	4x E3.S 1T (PCIe Gen5)	2x x16 PCIe Gen5 (FHFL)	Riser 1: 1x x16 PCIe Gen5, 1x x16 PCIe Gen5 Riser 2: 1x x16 PCIe Gen5, 1x x16 PCIe Gen5

Table 6. Supported configurations with SXM5 model with PCIe Switch

Configuration	Config Number	CPU	GPU	Storage	I/O Front	I/O Rear
4-Way SXM5 GPU with Switch: GPU Direct Front I/O, & 4x U.2/U.3 Storage	8	2P	4-Way SXM5 GPU Baseboard PCIe Gen5	4x U.2/U.3 (PCIe Gen4)	2 x16 PCIe Gen5 (FHHL)	OCP (x16 PCIe Gen4), Riser 1: 1 x16 PCIe Gen5, 1 x16 PCIe Gen5, Riser 2: 1 x16 PCIe Gen5, 1 x16 PCIe Gen5
4-Way SXM5 GPU w/ Switch: GPU Direct Front I/O, & 4x U.2/U.3/E3.S Storage	26	2P	4-Way SXM5 GPU Baseboard PCIe Gen5	4x E3.S 1T (PCIe Gen5)	2x x16 PCIe Gen5 (FHHL)	OCP (x16 PCIe Gen4) Riser 1: 1x x16 PCIe Gen5, 1x x16 PCIe Gen5 Riser 2: 1x x16 PCIe Gen5, 1x x16 PCIe Gen4 (slot 21)

Table 7. Supported configurations with SXM5 model with NVIDIA SXM5 CX7 Mezz Carrier Board

Configuration	Config Number	CPU	GPU	Storage	I/O Front	I/O Rear
Single Socket with 4x drives, Front IO only	9 (/15 / 27 / 30)	1P	4-Way SXM5 GPU Baseboard PCIe Gen5	4x U.2/U.3 (PCIe Gen3) or 4x E3.S 1T (PCIe Gen4)	2x OSFP 800 Gbps or 2x OSFP 400	Not supported
Single Socket with 2 drives, Front IO and limited OCP rear IO	13 (/29 / 19 / 32)	1P	4-Way SXM5 GPU Baseboard PCIe Gen5	2x U.2/U.3 (PCIe Gen3) or 2x E3.S 1T (PCIe Gen4)	2x OSFP 800 Gbps or 2x OSFP 400 Gbps	OCP (x8 PCIe Gen4)
Single Socket without drives, Front IO and choice of rear IO	10 (/11 / 16 / 17)	1P	4-Way SXM5 GPU Baseboard PCIe Gen5	Not supported	2x OSFP 800 Gbps or 2x OSFP 400 Gbps	OCP (x16 PCIe Gen4) or Riser 1: 1 x16 PCIe Gen5
Dual Socket with 4x drives, Front IO and Rear IO	12 (/28 /18 /31)	2P	4-Way SXM5 GPU Baseboard PCIe Gen5	4x U.2/U.3 (PCIe Gen4) or 4x E3.S 1T (PCIe Gen5)	2x OSFP 800 Gbps or 2x OSFP 400 Gbps	OCP (x16 PCIe Gen4), Riser 1: 1 x16 PCIe Gen5, Riser 2: 1 x16 PCIe Gen5, 1 x16 PCIe Gen5 (slot 21)

Processors options

The SR675 V3 supports processors in the fourth-generation AMD EPYC family. The server supports up to two processors. Configurations with a single processor are supported.

Topics in this section:

- Processor options
- Processor features
- UEFI operating modes

The figure shows the SR675 V3 on a Two Socket Platform.

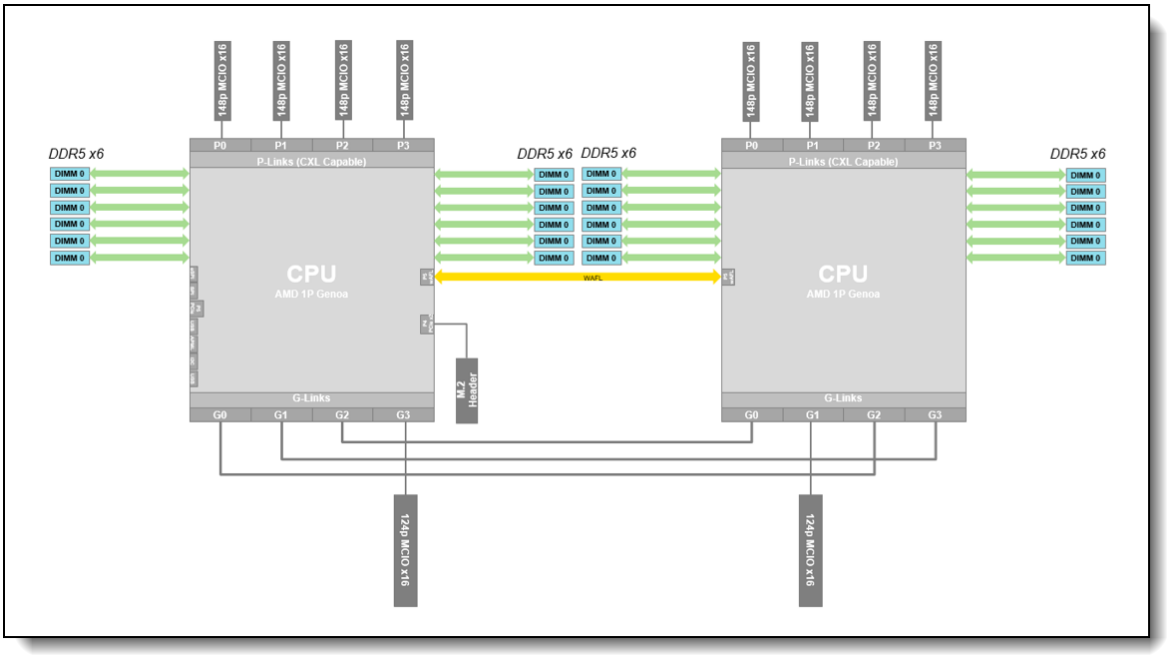

Figure 10. AMD Genoa DDR5 Processor on Two Socket Platform

Processor options

The table below lists the AMD processors that are currently supported by the SR675 V3.

All supported processors have the following characteristics:

- Fourth-generation AMD EPYC processors (formerly codenamed "Genoa")
- Also support
- 12 DDR5 memory channels
- 128 PCIe 5.0 I/O lanes, 64 lanes available for PCIe and NVMe devices

The SR675 V3 also supports the following advanced processor families:

- 4th Gen AMD EPYC processors with AMD 3D V-Cache (formerly codenamed "Genoa-X"). These are high-performance processors have larger L3 cache, up to 1.152GB, and are best suited for Electronic Design Automation (EDA), Computational Fluid Dynamics (CFD) and Finite Element Analysis (FEA) workloads.
- 4th Gen AMD EPYC processors with Zen 4c architecture (formerly codenamed "Bergamo"). These processors have higher core counts, up to 128 cores, targeted at cloud native applications that are designed to exploit the scale, elasticity, resiliency, and flexibility of private & public clouds.

Table 8. SR675 V3 processor support

Feature code	SKU	Description	Quantity supported
4th Gen AMD EPYC processors ("Genoa")			
BREE	9124	ThinkSystem AMD EPYC 9124 16C 200W 3.0GHz Processor	1 or 2
BREJ	9174F	ThinkSystem AMD EPYC 9174F 16C 320W 4.1GHz Processor	1 or 2
BREH	9224	ThinkSystem AMD EPYC 9224 24C 200W 2.5GHz Processor	1 or 2
BRED	9254	ThinkSystem AMD EPYC 9254 24C 200W 2.9GHz Processor	1 or 2
BREF	9274F	ThinkSystem AMD EPYC 9274F 24C 320W 4.05GHz Processor	1 or 2
BREC	9334	ThinkSystem AMD EPYC 9334 32C 210W 2.7GHz Processor	1 or 2
BR30	9354	ThinkSystem AMD EPYC 9354 32C 280W 3.25GHz Processor	1 or 2
BR32	9374F	ThinkSystem AMD EPYC 9374F 32C 320W 3.85GHz Processor	1 or 2
BREB	9454	ThinkSystem AMD EPYC 9454 48C 290W 2.75GHz Processor	1 or 2
BR31	9474F	ThinkSystem AMD EPYC 9474F 48C 360W 3.6GHz Processor	1 or 2
BREA	9534	ThinkSystem AMD EPYC 9534 64C 280W 2.45GHz Processor	1 or 2
BPVJ	9554	ThinkSystem AMD EPYC 9554 64C 360W 3.1GHz Processor	1 or 2
BR2Z	9634	ThinkSystem AMD EPYC 9634 84C 290W 2.25GHz Processor	1 or 2
BPVK	9654	ThinkSystem AMD EPYC 9654 96C 360W 2.4GHz Processor	1 or 2
4th AMD EPYC processors with AMD 3D V-Cache ("Genoa-X")			
BXFT	9184X	ThinkSystem AMD EPYC 9184X 16C 320W 3.55GHz Processor	1 or 2
BW9V	9384X	ThinkSystem AMD EPYC 9384X 32C 320W 3.1GHz Processor	1 or 2
BW9U	9684X	ThinkSystem AMD EPYC 9684X 96C 400W 2.55GHz Processor	1 or 2
4th Gen AMD EPYC processors with Zen 4c architecture ("Bergamo")			
BW9S	9734	ThinkSystem AMD EPYC 9734 112C 340W 2.2GHz Processor	1 or 2
BW9T	9754	ThinkSystem AMD EPYC 9754 128C 360W 2.25GHz Processor	1 or 2

Processor features

The following table lists the features of the supported processors.

Table 9. Processor specifications

EPYC model	Cores / Threads	Base Frequency	Max Boost Frequency†	L3 Cache	Memory channels	Memory bus	TDP
4th Gen AMD EPYC processors ("Genoa")							
9124	16 / 32	3.0 GHz	3.7 GHz	64 MB	12	4800 MHz	200W
9174F	16 / 32	4.1 GHz	4.4 GHz	256 MB	12	4800 MHz	320W
9224	24 / 48	2.5 GHz	3.7 GHz	64 MB	12	4800 MHz	200W
9254	24 / 48	2.9 GHz	4.15 GHz	128 MB	12	4800 MHz	200W
9274F	24 / 48	4.05 GHz	4.3 GHz	256 MB	12	4800 MHz	320W
9334	32 / 64	2.7 GHz	3.9 GHz	128 MB	12	4800 MHz	210W
9354	32 / 64	3.25 GHz	3.8 GHz	256 MB	12	4800 MHz	280W
9374F	32 / 64	3.85 GHz	4.3 GHz	256 MB	12	4800 MHz	320W
9454	48 / 96	2.75 GHz	3.8 GHz	256 MB	12	4800 MHz	290W
9474F	48 / 96	3.6 GHz	4.1 GHz	256 MB	12	4800 MHz	360W
9534	64 / 128	2.45 GHz	3.7 GHz	256 MB	12	4800 MHz	280W

EPYC model	Cores / Threads	Base Frequency	Max Boost Frequency†	L3 Cache	Memory channels	Memory bus	TDP
9554	64 / 128	3.1 GHz	3.75 GHz	256 MB	12	4800 MHz	360W
9634	84 / 168	2.25 GHz	3.7 GHz	384 MB	12	4800 MHz	290W
9654	96 / 192	2.4 GHz	3.7 GHz	384 MB	12	4800 MHz	360W
4th AMD EPYC processors with AMD 3D V-Cache ("Genoa-X")							
9184X	16 / 32	3.55 GHz	4.20 GHz	768 MB	12	4800 MHz	320W
9384X	32 / 64	3.1 GHz	3.9 GHz	768 MB	12	4800 MHz	320W
9684X	96 / 192	2.55 GHz	3.7 GHz	1150 MB	12	4800 MHz	400W
4th Gen AMD EPYC processors with Zen 4c architecture ("Bergamo")							
9734	112 / 224	2.2 GHz	3.0 GHz	256 MB	12	4800 MHz	340W
9754	128 / 256	2.25 GHz	3.2 GHz	256 MB	12	4800 MHz	360W

† The maximum single-core frequency that the processor is capable of operating

UEFI operating modes

The SR675 V3 offers preset operating modes that affect energy consumption and performance. These modes are a collection of predefined low-level UEFI settings that simplify the task of tuning the server to suit your business and workload requirements.

The following table lists the feature codes that allow you to specify the mode you wish to preset in the factory for CTO orders.

Table 10. UEFI operating mode presets in DCSC

Feature code	Description
BFYA	Operating mode selection for: "Maximum Efficiency Mode"
BFYB	Operating mode selection for: "Maximum Performance Mode"

The preset modes for the SR675 V3 are as follows:

- **Maximum Efficiency Mode** (feature BFYA): Maximizes performance/watt efficiency while maintaining reasonable performance
- **Maximum Performance Mode** (feature BFYB): Achieves maximum performance but with higher power consumption and lower energy efficiency.

For details about these preset modes, and all other performance and power efficiency UEFI settings offered in the SR675 V3, see the paper "Tuning UEFI Settings for Performance and Energy Efficiency on AMD Processor-Based ThinkSystem Servers", available from https://lenovopress.lenovo.com/lp1267.

Memory options

The SR675 V3 uses Lenovo TruDDR5 memory operating at up to 4800 MHz. The server supports up to 24 DIMMs with 2 processors. The processors have 12 memory channels and support 1 DIMM per channel. The server supports up to 3TB of memory using 24x 128GB 3DS RDIMMs and two processors.

The following table lists the memory options that are available for the server.

Lenovo TruDDR5 memory uses the highest quality components that are sourced from Tier 1 DRAM suppliers and only memory that meets the strict requirements of Lenovo is selected. It is compatibility tested and tuned to maximize performance and reliability. From a service and support standpoint, Lenovo TruDDR5 memory automatically assumes the system warranty, and Lenovo provides service and support worldwide.

Table 11. Memory options

Part number	Feature code	Description
9x4 RDIMMs		
4X77A81442	BQ36	ThinkSystem 64GB TruDDR5 4800MHz (2Rx4) 9x4 RDIMM-A
10x4 RDIMMs		
4X77A81441	BQ3D	ThinkSystem 64GB TruDDR5 4800MHz (2Rx4) 10x4 RDIMM-A
x8 RDIMMs		
4X77A81437	BQ3C	ThinkSystem 16GB TruDDR5 4800MHz (1Rx8) RDIMM-A
4X77A81440	BQ37	ThinkSystem 32GB TruDDR5 4800MHz (2Rx8) RDIMM-A
10x4 3DS RDIMMs		
4X77A81443	BQ3A	ThinkSystem 128GB TruDDR5 4800MHz (4Rx4) 3DS RDIMM-A

9x4 RDIMMs (also known as Optimized or EC4 RDIMMs) are a new lower-cost DDR5 memory option supported in ThinkSystem V3 servers. 9x4 DIMMs offer the same performance as standard RDIMMs (known as 10x4 or EC8 modules), however they support lower fault-tolerance characteristics. Standard RDIMMs and 3DS RDIMMs support two 40-bit subchannels (that is, a total of 80 bits), whereas 9x4 RDIMMs support two 36-bit subchannels (a total of 72 bits). The extra bits in the subchannels allow standard RDIMMs and 3DS RDIMMs to support Single Device Data Correction (SDDC), however 9x4 RDIMMs do not support SDDC. Note, however, that all DDR5 DIMMs, including 9x4 RDIMMs, support Bounded Fault correction, which enables the server to correct most common types of DRAM failures.

For more information on DDR5 memory, see the Lenovo Press paper, *Introduction to DDR5 Memory*, available from https://lenovopress.com/lp1618.

The following rules apply when selecting the memory configuration:

- The SR675 V3 supports quantities 1, 2, 4, 6, 8, 10, 12 DIMMs per processor; other quantities not supported
- The server supports four types of DIMMs: 9x4 RDIMMs, 10x4 RDIMMs, x8 RDIMMs and 3DS RDIMMs; UDIMMs and LRDIMMs are not supported
- All memory DIMMs must be identical part numbers
- SXM5 configurations with the NVIDIA HGX H100 80GB 700W 4-GPU Board (feature BQQV) have minimum memory requirements. For SXM5 configurations, the following rules apply:
  - With 1 CPU installed, only the following memory configurations are supported:
    - 10x or 12x 64GB RDIMMs (feature BQ36 or BQ3D)
    - 8x, 10x, or 12x 128GB 3DS RDIMMs (feature BQ3A)
  - With 2 CPUs installed, only the following memory configurations are supported:
    - 16x, 20x, or 24x 32GB DIMMs (feature BQ37)
    - 16x, 20x, or 24x 64GB DIMMs (feature BQ36 or BQ3D)
    - 16x, 20x, or 24x 128GB DIMMs (feature BQ3A)

Note: Memory mirroring and memory rank sparing are not supported.

For best performance, consider the following:

- Ensure the memory installed is at least the same speed as the memory bus of the selected processor.
- Populate all 12 memory channels with identical DIMMs (same Lenovo part number)

The following memory protection technologies are supported:

- ECC detection/correction
- Bounded Fault detection/correction
- SDDC (for x4-based memory DIMMs; look for "x4" in the DIMM description. Not supported with 9x4 RDIMMs)
- Patrol/Demand Scrubbing
- DRAM Address Command Parity with Replay
- DRAM Uncorrected ECC Error Retry
- On-die ECC
- ECC Error Check and Scrub (ECS)
- Post Package Repair

Internal storage

The SR675 V3 supports drives at the front of the server as shown in the Components and connectors section. The choice of drive bays depends on the GPU configuration selected, as described in Configurations section:

- SXM5 model - choice of:
  - 4x 2.5-inch hot-swap NVMe drive bays
  - 4x E3.S 1T EDSFF hot-swap drives
- 4-DW GPU model - choice of:
  - 8x 2.5-inch hot-swap AnyBay drive bays supporting SAS, SATA or NVMe drives
- 8-DW GPU model:
  - 6x EDSFF E1.S 5.9 mm hot-swap NVMe drive bays
  - 4x EDSFF E3.S 1T hot-swap drives

All drives are hot-swap and are accessible from the front of the server.

Where NVMe drives are supported, they are all connected using four PCIe lanes which means there is no NVMe oversubscription.

The server also supports one or two M.2 drives for OS boot functions, installed in an M.2 adapter internal to the server.

In this section:

- Backplanes
- RAID flash power module (supercap) support
- M.2 drives
- E1.S EDSFF drives
- E3.S EDSFF drives

Backplanes

The backplanes used to provide the drive bays are listed in the following table. The table lists the feature codes for ordering CTO - the required cables are derived by the configurator.

The table also lists the option part numbers for field upgrades. Part numbers include:

- Backplane
- Drive bay fillers
- Data cables to connect drives to controllers
- Power cables

Table 12. Backplanes for drive bays

Part number	Feature code	Description	Maximum supported
SXM5 model			
4XB7A69399	BHD6	ThinkSystem 4x2.5" NVMe Backplane Option Kit	1
4XB7A86722	BTMB	ThinkSystem SR675 V3 1x4 E3.S Backplane for HGX NVLink GPU Base Option Kit	1
4-DW GPU model			
4XB7A83673	BLL2	ThinkSystem SR650 V3/ SR675 V3 8x2.5" Gen5 AnyBay Backplane Option Kit	1
8-DW GPU model			
4XB7A69398	BFTQ	ThinkSystem 1x6 E.1S EDSFF Backplane Option Kit	1
4XB7A86723	BTMB	ThinkSystem SR675 V3 1x4 E3.S Backplane for 8DW PCIe GPU Base Option Kit	1

RAID flash power module (supercap) support

If you plan to add one of the RAID adapters that includes a RAID flash power module (supercap) as a field upgrade, then you will also need to order a Supercap installation kit for the supercap. For CTO orders, the components needed are automatically derived when you select the RAID adapter.

The SR675 V3 supports up to two supercap holders. SR675 V3 supports 2x rear risers and each of them can support one supercap holder on the top slot. Note that the serial port cable is placed at the same slot. If the slot is occupied by the supercap holder, then the serial port cable needs to be assigned to a different port.

Serial port is disabled for the 2x supercap configuration.

The following figure shows the RAID flash power module in SR675 V3.

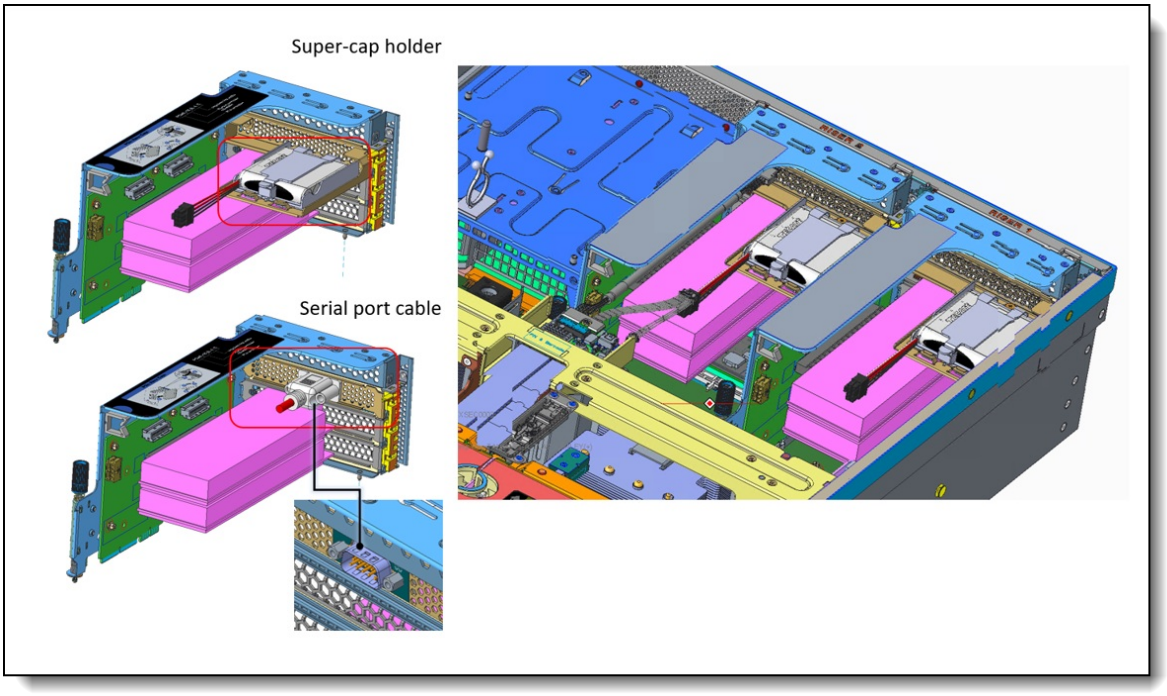

Figure 11. RAID flash power module (supercap) support in SR675 V3

The RAID adapters that require a supercap holder are as follows:

- ThinkSystem RAID 940-8i 4GB Flash PCIe Gen4 12Gb Adapter (PN: 4Y37A09728)
- ThinkSystem RAID 940-8e 4GB Flash PCIe Gen4 12Gb Adapter (PN: 4Y37A78836)
- ThinkSystem RAID 940-16i 8GB Flash PCIe Gen4 12Gb Adapter (PN: 4Y37A09730)

The supercap mounts in a bracket that goes into the top slot of a rear PCIe riser. Ordering information is in the following table.

Table 13. Supercap holder

Part number	Feature	Description	Maximum supported
CTO only	BFH0	SR670 V2/ SR675 V3 Supercap Holder	2

M.2 drives

The SR675 V3 supports only NVMe M.2 boot devices. SATA M.2 is not supported. The system support M.2 boot backplanes attached to the P4 link of CPU1. Depending on the boot backplane that is attached, the system will support either two non-RAID x1 devices via direct connect or two x1 RAID NVMe M.2 devices behind a NVMe RAID controller. The system will detect the M.2 adapter installed and bifurcate the link accordingly

There is a M.2 modules supported, as listed in the following table.

Table 14. M.2 modules

Part number	Feature code	Description	SATA drives	NVMe drives	RAID	Maximum supported
4Y37A09738	B5XJ	ThinkSystem M.2 SATA/NVMe 2-Bay Enablement Kit	Yes	Yes	Optional*	2
4Y37A79663	BM8X	ThinkSystem M.2 SATA/x4 NVMe 2-Bay Enablement Kit	Yes	Yes	Optional*	2
4Y37A09750	B8P9	ThinkSystem M.2 NVMe 2-Bay RAID Enablement Kit	No	Yes	Yes	2

*B5XJ and BM8X support RAID with cabling to external RAID adapter.

Supported drives are listed in the Internal drive options section.

The M.2 SATA/NVMe 2-Bay Enablement Kit (B5XJ) has the following features:

- Supports one or two M.2 NVMe drives
- When two drives installed, they must be both NVMe
- Support 42mm, 60mm, 80mm and 110mm drive form factors (2242, 2260, 2280 and 22110)
- JBOD native support; no built-in RAID support
- Either 6Gbps SATA or PCIe 3.0 x1 interface to the drives depending on the drives installed
- Supports monitoring and reporting of events and temperature through I2C
- Firmware update via Lenovo firmware update tools

The M.2 SATA/x4 NVMe 2-Bay Enablement Kit (BM8X) has the following features:

- Supports one or two M.2 drives, either SATA or NVMe
- When two drives installed, they must be either both SATA or both NVMe
- Support 42mm, 60mm, 80mm and 110mm drive form factors (2242, 2260, 2280 and 22110)
- No onboard RAID; RAID functionality is provided by a separate adapter (SATA or NVMe)
- Either 6Gbps SATA or PCIe 4.0 x4 interface to the drives depending on the drives installed
- Supports monitoring and reporting of events and temperature through I2C
- Firmware update via Lenovo firmware update tools

The M.2 NVMe 2-Bay RAID Enablement Kit (B8P9) has the following features:

- Supports one or two NVMe M.2 drives
- Support 42mm, 60mm, 80mm and 110mm drive form factors (2242, 2260, 2280 and 22110)
- RAID support via an onboard Marvell 88NR2241 NVMe RAID Controller
- With 1 drive, supports single-drive RAID-0
- With 2 drives, supports 2-drive RAID-0, 2-drive RAID-1, or two single-drive RAID-0 arrays
- PCIe 3.0 x2 host interface; PCIe 3.0 x1 connection to each drive
- Management and configuration support via UEFI and OS-based tools
- Supports monitoring and reporting of events and temperature through I2C
- Firmware update via Lenovo firmware update tools

For field upgrades, the SR675 V3 also requires an additional M.2 cable kit. Ordering information is listed in the following table.

Table 15. M.2 Cable for field upgrades

Part number	Description
4X97A69394	ThinkSystem SR670 V2/ SR675 V3/ SN550 V2 M.2 SATA/NVMe Cable • M.2 Signal & Power Cable

For further details about M.2 components, see the *ThinkSystem M.2 Drives and M.2 Adapters* product guide: https://lenovopress.com/lp0769-thinksystem-m2-drives-adapters

E1.S EDSFF drives

The 8-DW GPU model of the SR675 V3 supports E1.S EDSFF (Enterprise & Datacenter SSD Form Factor) drives with the E1.S (short) form factor. Up to 6 hot-swap EDSFF drives can be installed in the server.

EDSFF drives are a new type of NVMe solid-state drive and have the following characteristics:

- NVMe SSD with PCIe 4.0 x4 host interface
- Hot-swap drive tray
- E1.S form factor defined by SNIA specification SFF-TA-1006
- 112 mm (4.4 inches) long x 32 mm (1.2 inches) tall

The SR675 V3 in the 8-DW GPU configuration supports 6x EDSFF drives, as shown in the following figure.

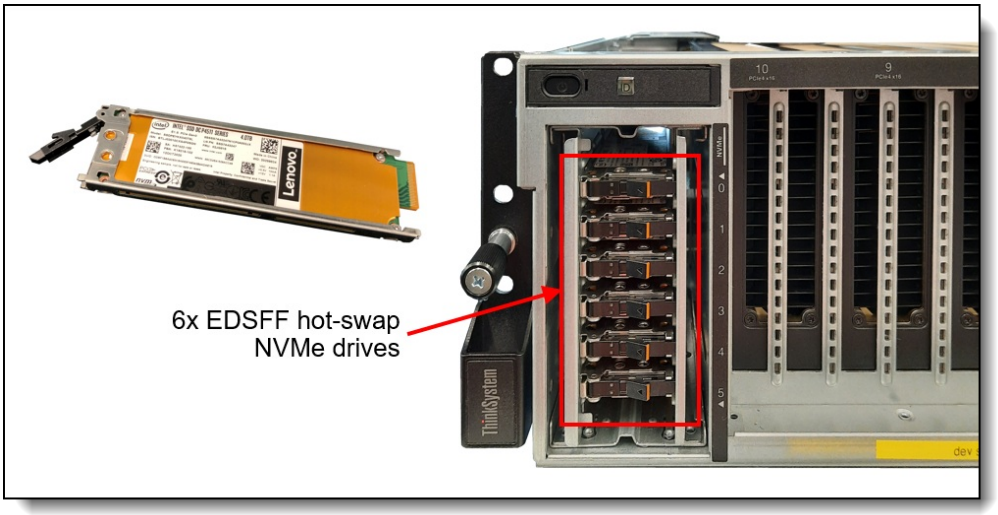

Figure 12. SR675 V3 E1.S EDSFF drive bays (8-DW GPU configuration only)

E3.S EDSFF drives

The 8-DW GPU and SXM GPU models of the SR675 V3 supports E3.S 1T EDSFF (Enterprise & Datacenter SSD Form Factor) drives with the E1.S (short) form factor. Up to 4 hot-swap EDSFF drives can be installed in the server.

EDSFF drives are a new type of NVMe solid-state drive and have the following characteristics:

- NVMe SSD with PCIe 5.0 x4, 2x2 host interface
- Hot-swap drive tray
- S form factor defined by SNIA specification SFF-TA-1008 Rev 2.0 and SFF-TA-1023
- 113 mm (4.4 inches) long x 7.5 mm (0.3 inches) tall

Controllers for internal storage

The SR675 V3 offers a variety of controller options for internal drives:

- For front-mount drives:
  - RAID adapters and HBAs for SAS/SATA drives (PCIe slot-based)
- For M.2 drives internal to the server (see M.2 drives section)
  - NVMe controller integrated on the M.2 SATA/NVMe 2-Bay RAID Enablement Kit (BDY4)

The following table lists the adapters used for the internal storage of the server.

Table 16. Internal Storage adapter support

Part number	Feature code	Description	Power module (supercap)	Maximum supported
RAID Adapter - PCIe 3.0				
4Y37A72482	BJHK	ThinkSystem RAID 5350-8i PCIe 12Gb Adapter	No	1
RAID Adapter - PCIe 4.0				
4Y37A72483	BJHL	ThinkSystem RAID 9350-8i 2GB Flash PCIe 12Gb Adapter	No	1
4Y37A78834	BMFT	ThinkSystem RAID 540-8i PCIe Gen4 12Gb Adapter	No	2
4Y37A09728	B8NY	ThinkSystem RAID 940-8i 4GB Flash PCIe Gen4 12Gb Adapter	Included	1
4Y37A09730	B8NZ	ThinkSystem RAID 940-16i 8GB Flash PCIe Gen4 12Gb Adapter	Included	1
SAS/SATA HBA				
4Y37A72480	BJHH	ThinkSystem 4350-8i SAS/SATA 12Gb HBA	No	1
4Y37A78601	BM51	ThinkSystem 440-8i SAS/SATA PCIe Gen4 12Gb HBA	No	1
NVMe adapters				
4Y37A09728†	BGM1	ThinkSystem RAID 940-8i 4GB Flash PCIe Gen4 12Gb Adapter for U.3 (Tri-Mode support)	Included	1
4Y37A09730	BDY4	ThinkSystem RAID 940-16i 8GB Flash PCIe Gen4 12Gb Internal Adapter for U.3 (Tri-Mode support)	Included	1

† Adapter also supports PCIe 4.0 x1 connectivity to NVMe drives (requires NVMe drives with U.3 interface)

For specifications about the RAID adapters and HBAs supported by the SR675 V3, see the ThinkSystem RAID Adapter and HBA Comparison, available from:
https://lenovopress.com/lp1288-lenovo-thinksystem-raid-adapter-and-hba-reference#sr670-v2-support=SR670%2520V2

Configuration notes:

- **RAID** adapters are not supported in the front risers PCIe slots.
- **Supercap support**: The table lists whether the adapter includes a power module (supercap) to power the flash memory. The server supports only 1 supercap as described in the RAID flash power module (supercap) support section. The number of supercaps supported also determines the maximum number of RAID adapters with flash that can be installed in the server, both for internal drive connectivity and external drive connectivity.
- **Field upgrades**: If you are adding a RAID adapter with supercap to the server as a field upgrade, you may need a supercap holder as described in the RAID flash power module (supercap) support section.
- **E810 Ethernet and X350 RAID/HBAs**: The use of both an Intel E810 network adapter and an X350 HBA/RAID adapter (9350, 5350 and 4350) is currently not supported in ThinkSystem servers. For details see Support Tip HT513226. Planned support for this combination of adapters is 4Q/2023 (SI 23-2).

The RAID 940-8i and RAID 940-16i adapters also support NVMe through a feature named Tri-Mode support (or Trimode support). This feature enables the use of NVMe U.3 drives at the same time as SAS and SATA drives. Cabling of the controller to the backplanes is the same as with SAS/SATA drives, and the NVMe drives are connected via a PCIe x1 link to the controller.

NVMe drives connected using Tri-Mode support provide better performance than SAS or SATA drives: A SATA SSD has a data rate of 6Gbps, a SAS SSD has a data rate of 12Gbps, whereas an NVMe U.3 Gen 4 SSD with a PCIe x1 link will have a data rate of 16Gbps. NVMe drives typically also have lower latency and higher IOPS compared to SAS and SATA drives. Tri-Mode is supported with U.3 NVMe drives in either 2.5-inch and 3.5-inch form factor and requires an AnyBay backplane.

Tri-Mode requires U.3 drives: Only NVMe drives with a U.3 interface are supported. U.2 drives are not supported. See the Internal drive options section for the U.3 drives supported by the server.

For details about these adapters, see the relevant product guide:

- SAS HBAs: https://lenovopress.com/servers/options/hba
- RAID adapters: https://lenovopress.com/servers/options/raid

Internal drive options

The following tables list the drive options for internal storage of the server.

2.5-inch hot-swap drives:

- 2.5-inch hot-swap 24 Gb SAS SSDs
- 2.5-inch hot-swap 6 Gb SATA SSDs
- 2.5-inch hot-swap PCIe 5.0 NVMe SSDs
- 2.5-inch hot-swap PCIe 4.0 NVMe SSDs

EDSFF hot-swap drives:

- E3.S EDSFF hot-swap PCIe 5.0 NVMe SSDs
- E1.S EDSFF hot-swap PCIe 4.0 NVMe SSDs

M.2 drives:

- M.2 PCIe 4.0 NVMe drives

M.2 drive support: The use of M.2 drives requires an additional adapter as described in the M.2 drives subsection.

SED support: The tables include a column to indicate which drives support SED encryption. The encryption functionality can be disabled if needed. Note: Not all SED-enabled drives have "SED" in the description.

Table 17. 2.5-inch hot-swap 24 Gb SAS SSDs

Part number	Feature code	Description	SED support	Max Qty
2.5-inch hot-swap SSDs - 24 Gb SAS - Mixed Use/Mainstream (3-5 DWPD)				
4XB7A80340	BNW8	ThinkSystem 2.5" PM1655 800GB Mixed Use SAS 24Gb HS SSD	Support	8
4XB7A80341	BNW9	ThinkSystem 2.5" PM1655 1.6TB Mixed Use SAS 24Gb HS SSD	Support	8
4XB7A80342	BNW6	ThinkSystem 2.5" PM1655 3.2TB Mixed Use SAS 24Gb HS SSD	Support	8
4XB7A80343	BP3K	ThinkSystem 2.5" PM1655 6.4TB Mixed Use SAS 24Gb HS SSD	Support	8
2.5-inch hot-swap SSDs - 24 Gb SAS - Read Intensive/Entry/Capacity (<3 DWPD)				
4XB7A80318	BNWC	ThinkSystem 2.5" PM1653 960GB Read Intensive SAS 24Gb HS SSD	Support	8
4XB7A80319	BNWE	ThinkSystem 2.5" PM1653 1.92TB Read Intensive SAS 24Gb HS SSD	Support	8
4XB7A80320	BNWF	ThinkSystem 2.5" PM1653 3.84TB Read Intensive SAS 24Gb HS SSD	Support	8
4XB7A80321	BP3E	ThinkSystem 2.5" PM1653 7.68TB Read Intensive SAS 24Gb HS SSD	Support	8
4XB7A80322	BP3J	ThinkSystem 2.5" PM1653 15.36TB Read Intensive SAS 24Gb HS SSD	Support	8
4XB7A80323	BP3D	ThinkSystem 2.5" PM1653 30.72TB Read Intensive SAS 24Gb HS SSD	Support	8

Table 18. 2.5-inch hot-swap 6 Gb SATA SSDs

Part number	Feature code	Description	SED support	Max Qty
2.5-inch hot-swap SSDs - 6 Gb SATA - Mixed Use/Mainstream (3-5 DWPD)				
4XB7A82289	BQ21	ThinkSystem 2.5" 5400 MAX 480GB Mixed Use SATA 6Gb HS SSD	Support	8
4XB7A82290	BQ24	ThinkSystem 2.5" 5400 MAX 960GB Mixed Use SATA 6Gb HS SSD	Support	8
4XB7A82291	BQ22	ThinkSystem 2.5" 5400 MAX 1.92TB Mixed Use SATA 6Gb HS SSD	Support	8
4XB7A82292	BQ23	ThinkSystem 2.5" 5400 MAX 3.84TB Mixed Use SATA 6Gb HS SSD	Support	8
4XB7A17125	BA7Q	ThinkSystem 2.5" S4620 480GB Mixed Use SATA 6Gb HS SSD	No	8
4XB7A17126	BA4T	ThinkSystem 2.5" S4620 960GB Mixed Use SATA 6Gb HS SSD	No	8
4XB7A17127	BA4U	ThinkSystem 2.5" S4620 1.92TB Mixed Use SATA 6Gb HS SSD	No	8
4XB7A17128	BK7L	ThinkSystem 2.5" S4620 3.84TB Mixed Use SATA 6Gb HS SSD	No	8
2.5-inch hot-swap SSDs - 6 Gb SATA - Read Intensive/Entry (<3 DWPD)				
4XB7A82258	BQ1Q	ThinkSystem 2.5" 5400 PRO 240GB Read Intensive SATA 6Gb HS SSD	Support	8
4XB7A82259	BQ1P	ThinkSystem 2.5" 5400 PRO 480GB Read Intensive SATA 6Gb HS SSD	Support	8
4XB7A82260	BQ1R	ThinkSystem 2.5" 5400 PRO 960GB Read Intensive SATA 6Gb HS SSD	Support	8
4XB7A82261	BQ1X	ThinkSystem 2.5" 5400 PRO 1.92TB Read Intensive SATA 6Gb HS SSD	Support	8
4XB7A82262	BQ1S	ThinkSystem 2.5" 5400 PRO 3.84TB Read Intensive SATA 6Gb HS SSD	Support	8
4XB7A82263	BQ1T	ThinkSystem 2.5" 5400 PRO 7.68TB Read Intensive SATA 6Gb HS SSD	Support	8
4XB7A72438	BM8B	ThinkSystem 2.5" PM893 480GB Read Intensive SATA 6Gb HS SSD	No	8
4XB7A72439	BM8A	ThinkSystem 2.5" PM893 960GB Read Intensive SATA 6Gb HS SSD	No	8
4XB7A72440	BM89	ThinkSystem 2.5" PM893 1.92TB Read Intensive SATA 6Gb HS SSD	No	8
4XB7A72441	BM88	ThinkSystem 2.5" PM893 3.84TB Read Intensive SATA 6Gb HS SSD	No	8
4XB7A72442	BM87	ThinkSystem 2.5" PM893 7.68TB Read Intensive SATA 6Gb HS SSD	No	8
4XB7A17072	B99D	ThinkSystem 2.5" S4520 240GB Read Intensive SATA 6Gb HS SSD	No	8
4XB7A17101	BA7G	ThinkSystem 2.5" S4520 480GB Read Intensive SATA 6Gb HS SSD	No	8
4XB7A17102	BA7H	ThinkSystem 2.5" S4520 960GB Read Intensive SATA 6Gb HS SSD	No	8
4XB7A17103	BA7J	ThinkSystem 2.5" S4520 1.92TB Read Intensive SATA 6Gb HS SSD	No	8
4XB7A17104	BK77	ThinkSystem 2.5" S4520 3.84TB Read Intensive SATA 6Gb HS SSD	No	8
4XB7A17105	BK78	ThinkSystem 2.5" S4520 7.68TB Read Intensive SATA 6Gb HS SSD	No	8

Table 19. 2.5-inch hot-swap PCIe 5.0 NVMe SSDs

Part number	Feature code	Description	SED support	Max Qty
2.5-inch SSDs - U.2 PCIe 5.0 NVMe - Read Intensive/Entry (<3 DWPD)				
4XB7A82366	BTPZ	ThinkSystem 2.5" U.3 PM1743 1.92TB Read Intensive NVMe PCIe 5.0 x4 HS SSD	Support	8
4XB7A82367	BTQ0	ThinkSystem 2.5" U.3 PM1743 3.84TB Read Intensive NVMe PCIe 5.0 x4 HS SSD	Support	8
4XB7A82368	BTQ1	ThinkSystem 2.5" U.3 PM1743 7.68TB Read Intensive NVMe PCIe 5.0 x4 HS SSD	Support	8
4XB7A82369	BTQ2	ThinkSystem 2.5" U.3 PM1743 15.36TB Read Intensive NVMe PCIe 5.0 x4 HS SSD	Support	8

Note: NVMe PCIe SSDs support surprise hot removal and hot insertion, provided the operating system supports PCIe SSD hot-swap.

Table 20. 2.5-inch hot-swap PCIe 4.0 NVMe SSDs

Part number	Feature code	Description	SED support	Max Qty
2.5-inch SSDs - U.2 PCIe 4.0 NVMe - Write Intensive/Performance (10+ DWPD)				
4XB7A17158	BKKY	ThinkSystem 2.5" U.2 P5800X 400GB Write Intensive NVMe PCIe 4.0 x4 HS SSD	No	8
4XB7A17159	BKKZ	ThinkSystem 2.5" U.2 P5800X 800GB Write Intensive NVMe PCIe 4.0 x4 HS SSD	No	8
4XB7A17160	BMM8	ThinkSystem 2.5" U.2 P5800X 1.6TB Write Intensive NVMe PCIe 4.0 x4 HS SSD	No	8
2.5-inch SSDs - U.2 PCIe 4.0 NVMe - Mixed Use/Mainstream (3-5 DWPD)				
4XB7A17129	BNEG	ThinkSystem 2.5" U.2 P5620 1.6TB Mixed Use NVMe PCIe 4.0 x4 HS SSD	Support	8
4XB7A17130	BNEH	ThinkSystem 2.5" U.2 P5620 3.2TB Mixed Use NVMe PCIe 4.0 x4 HS SSD	Support	8
4XB7A17133	BNEZ	ThinkSystem 2.5" U.2 P5620 6.4TB Mixed Use NVMe PCIe 4.0 x4 HS SSD	Support	8
4XB7A17136	BA4V	ThinkSystem 2.5" U.2 P5620 12.8TB Mixed Use NVMe PCIe 4.0 x4 HS SSD	Support	8
2.5-inch SSDs - U.3 PCIe 4.0 NVMe - Mixed Use/Mainstream (3-5 DWPD)				
4XB7A79639	BNF1	ThinkSystem 2.5" U.3 7450 MAX 800GB Mixed Use NVMe PCIe 4.0 x4 HS SSD	Support	8
4XB7A13967	BNEJ	ThinkSystem 2.5" U.3 7450 MAX 1.6TB Mixed Use NVMe PCIe 4.0 x4 HS SSD	Support	8
4XB7A13970	BNEY	ThinkSystem 2.5" U.3 7450 MAX 3.2TB Mixed Use NVMe PCIe 4.0 x4 HS SSD	Support	8
4XB7A13971	BNEL	ThinkSystem 2.5" U.3 7450 MAX 6.4TB Mixed Use NVMe PCIe 4.0 x4 HS SSD	Support	8
2.5-inch SSDs - U.2 PCIe 4.0 NVMe - Read Intensive/Entry (<3 DWPD)				
4XB7A13941	BMGD	ThinkSystem 2.5" U.2 P5520 1.92TB Read Intensive NVMe PCIe 4.0 x4 HS SSD	Support	8
4XB7A13942	BMGE	ThinkSystem 2.5" U.2 P5520 3.84TB Read Intensive NVMe PCIe 4.0 x4 HS SSD	Support	8
4XB7A13943	BNEF	ThinkSystem 2.5" U.2 P5520 7.68TB Read Intensive NVMe PCIe 4.0 x4 HS SSD	Support	8
4XB7A13631	BNEQ	ThinkSystem 2.5" U.2 P5520 15.36TB Read Intensive NVMe PCIe 4.0 x4 HS SSD	Support	8
2.5-inch SSDs - U.3 PCIe 4.0 NVMe - Read Intensive/Entry (<3 DWPD)				
4XB7A79646	BNF3	ThinkSystem 2.5" U.3 7450 PRO 960GB Read Intensive NVMe PCIe 4.0 x4 HS SSD	Support	8
4XB7A79647	BNF2	ThinkSystem 2.5" U.3 7450 PRO 1.92TB Read Intensive NVMe PCIe 4.0 x4 HS SSD	Support	8
4XB7A79648	BNF5	ThinkSystem 2.5" U.3 7450 PRO 3.84TB Read Intensive NVMe PCIe 4.0 x4 HS SSD	Support	8
4XB7A79649	BNF4	ThinkSystem 2.5" U.3 7450 PRO 7.68TB Read Intensive NVMe PCIe 4.0 x4 HS SSD	Support	8

Note: NVMe PCIe SSDs support surprise hot removal and hot insertion, provided the operating system supports PCIe SSD hot-swap.

Table 21. E3.S EDSFF hot-swap PCIe 5.0 NVMe SSDs

Part number	Feature code	Description	SED support	Max Qty
E3.S hot-swap SSDs - PCIe 5.0 NVMe - Read Intensive/Entry (<3 DWPD)				
4XB7A84130	BVEJ	ThinkSystem E3.S PM1743 3.84TB Read Intensive NVMe PCIe 5.0 x4 HS SSD	Support	4
4XB7A84131	BVEK	ThinkSystem E3.S PM1743 7.68TB Read Intensive NVMe PCIe 5.0 x4 HS SSD	Support	4
4XB7A84132	BVEL	ThinkSystem E3.S PM1743 15.36TB Read Intensive NVMe PCIe 5.0 x4 HS SSD	Support	4

Note: NVMe PCIe SSDs support surprise hot removal and hot insertion, provided the operating system supports PCIe SSD hot-swap.

Table 22. E1.S EDSFF hot-swap PCIe 4.0 NVMe SSDs

Part number	Feature code	Description	SED support	Max Qty
E1.S hot-swap SSDs - PCIe 4.0 NVMe - Read Intensive/Entry (<3 DWPD)				
4XB7A13998	BP3L	ThinkSystem E1.S 5.9mm 7450 PRO 3.84TB Read Intensive NVMe PCIe 4.0 x4 HS SSD	Support	6
4XB7A80499	BPKW	ThinkSystem E1.S 5.9mm 7450 PRO 7.68TB Read Intensive NVMe PCIe 4.0 x4 HS SSD	Support	6

Note: NVMe PCIe SSDs support surprise hot removal and hot insertion, provided the operating system supports PCIe SSD hot-swap.

Table 23. M.2 PCIe 4.0 NVMe drives

Part number	Feature code	Description	SED support	Max Qty
M.2 SSDs - PCIe 4.0 NVMe - Read Intensive/Entry (<3 DWPD)				
4XB7A13999	BKSR	ThinkSystem M.2 7450 PRO 960GB Read Intensive NVMe PCIe 4.0 x4 NHS SSD	Support	2
4XB7A14000	BKSS	ThinkSystem M.2 7450 PRO 1.92TB Read Intensive Entry NVMe PCIe 4.0 x4 NHS SSD	Support	2

Optical drives

The server supports the external USB optical drive listed in the following table.

Table 24. External optical drive

Part number	Feature code	Description
7XA7A05926	AVV8	ThinkSystem External USB DVD RW Optical Disk Drive

The drive is based on the Lenovo Slim DVD Burner DB65 drive and supports the following formats: DVD-RAM, DVD-RW, DVD+RW, DVD+R, DVD-R, DVD-ROM, DVD-R DL, CD-RW, CD-R, CD-ROM.

I/O expansion

The SR675 V3 supports up to eight GPUs:

- SXM5 model: 4x PCIe 5.0 x16 connections for GPUs
- 4-DW GPU model: 4x PCIe 5.0 x16 slots for double-wide GPUs
- 8-DW GPU model: 8x PCIe 5.0 x16 slots for double-wide GPUs

The server also supports, for networking or storage adapters, up to four PCIe 5.0 x16 slots plus an OCP slot, depending on the GPU and drive bay configuration selected. Slot selection is a subset of the following slots:

- Front slots
  - Slot 1: PCIe 5.0 x16 slot, full-height; half-length in SXM5 model, full-length in 4-DW GPU and 8-DW GPU models
  - Slot 2: PCIe 5.0 x16 slot, full-height; half-length in SXM5 model, full-length in 4-DW GPU and 8-DW GPU models
- Rear riser slot 1
  - Slot 15: PCIe 5.0 x16 or x8 slot, full-height, half-length
  - Slot 16: PCIe 5.0 x16 slot, full-height, half-length
- Rear riser slot 2
  - Slot 20: PCIe 5.0 x16 slot, full-height, half-length
  - Slot 21: PCIe 5.0 x16 slot, full-height, half-length
- OCP slot
  - Slot 27: PCIe 4.0 x16 or x8 slot, OCP 3.0 form factor

The locations of these slots are shown in the following figure.

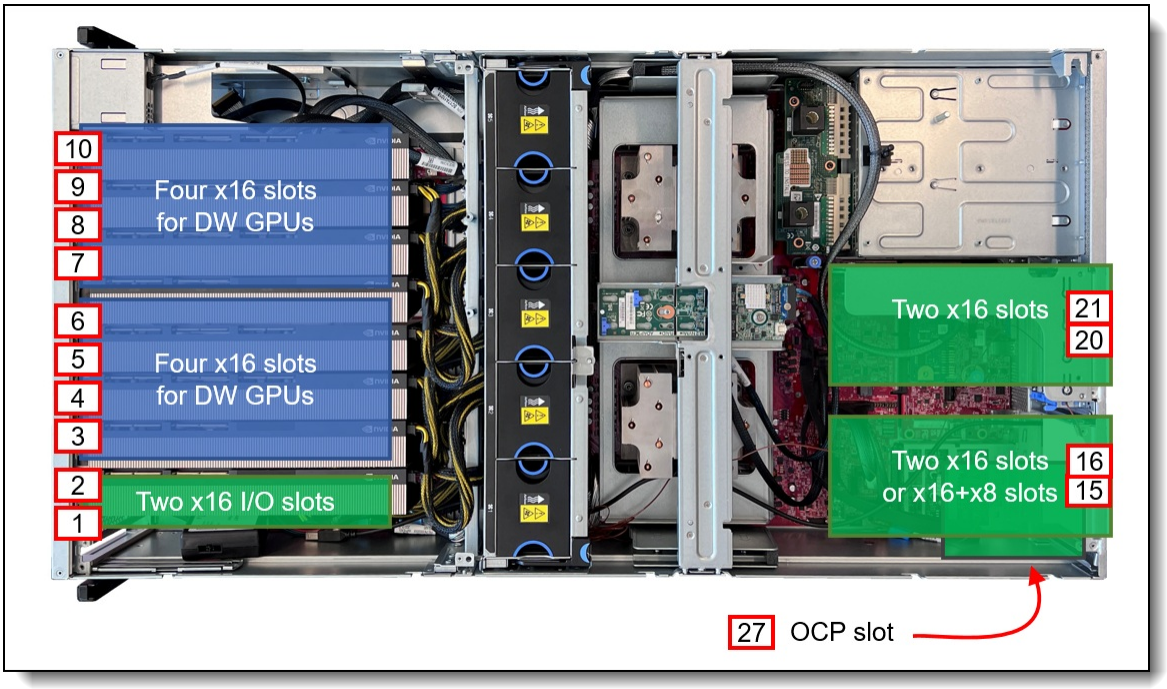

Figure 13. Locations of slots

All GPU and I/O slots are enabled using plug-in or cabled riser cards. Ordering information is shown in the following table.

Table 25. Riser cards

Feature code	Description	Maximum supported
GPU Risers		
BR7Q	ThinkSystem SR675 V3 Direct 4x16 PCIe DW GPU Riser	1
BR7S	ThinkSystem SR675 V3 Switched 4x16 PCIe DW GPU Direct RDMA Riser	2
BR7R	ThinkSystem SR675 V3 Direct 4x8 PCIe DW GPU Riser	2
BR7P	ThinkSystem SR675 V3 NVIDIA SXM5 CX7 Mezz Carrier Board*	1
BR9D	ThinkSystem SR675 V3 NVIDIA SXM5 PCIe Switch Board	1
Front I/O Riser		
BR7J	ThinkSystem SR675 V3 2x16 PCIe Gen4 Front IO Riser for HGX NVLink GPU Base	1
BR7H	ThinkSystem SR675 V3 2x16 PCIe Front IO Riser	1
Rear I/O Riser		
BR7N	ThinkSystem SR675 V3 x16 PCIe Gen5 Rear IO Riser	2
BR7L	ThinkSystem SR675 V3 x16/x16 PCIe Riser Option Kit	2
BR7M	ThinkSystem SR675 V3 x16/x8 Cabled PCIe Rear IO Riser	2

Note: The front risers are specifically designed to accommodate network adapters. RAID adapters are supported only in the rear slots.

* Future support

As listed in the table, there are three DW GPU risers, one x8 riser and two x16 risers. The x8 riser offers four x8 slots for double-wide GPUs with direct uplinks to the processors. The two x16 offer four x16 slots for double-wide GPUs, however the difference is the uplink (host) connection.

1. The direct x16 riser (feature BR7Q) has four x16 connections (64 lanes total, implemented using eight x8 cables) for connecting to the system processors. This provides a direct 1:1 connection to all four GPUs.
2. The switched riser with GPUDirect RDMA (feature BR7S) it allows the implementation of NVIDIA GPUDirect RDMA. Designed specifically for the needs of GPU acceleration, GPUDirect RDMA provides direct communication between NVIDIA GPUs in remote systems. This eliminates the system CPUs and the required buffer copies of data via the system memory, resulting in 10X better performance. The riser provides a x16 connection to a single CPU (a 1:4 connection to the four GPUs) and a x16 connection directly to I/O slots.
3. The direct x8 riser (feature BR7R) has four x8 connections (32 lanes total, implemented using four x8 cables) for connecting to the system processors. This provides a direct 1:1 connection to all eight GPUs.
4. The NVIDIA SXM5 CX7 Mezz Carrier Board (feature BR7P) provides a networking interface including four NVIDIA ConnectX-7 VPI network controllers for the Nvidia SXM5 baseboard. This provides an OSFP connection to the Front IO riser. The riser allows GPU direct connections for the network only.
5. The SXM5 PCIe Switch Riser (feature BR9D) supports 4-Way SXM5 4-GPU baseboard. The switched riser allows the implementation of NVIDIA GPU Direct. This eliminates the system CPUs and the required buffer copies of data via the system memory, resulting in better performance. BR9D provides two x16 connection to the Front IO riser that are NVIDIA GPU Direct.

   In a dual socket configuration, the riser provides four x16 connections to the CPUs (a 2:4 connection to the four GPUs), but no direct rear I/O connections. No additional GPU Direct connections.

   Use of the GPU risers is as follows:

- The 8-DW GPU model uses 2 switched risers. This provides connections for eight GPUs using a 1:2 or 1:4 subscription.
  - A direct x8 riser to provide connections for up to four double-wide GPUs. Each GPU gets a x8 connection.
- The 4-DW GPU model can use either
  - A direct x16 riser (1:1) or a switched x16 riser (1:2 or 1:4) to provide connections for four GPUs. Each GPU gets a x16 connection. The choice of GPU riser is based on what other I/O risers are used in the configuration.
- The SXM GPU model can use either:
  - A PCIe switch riser or a ConnectX-7 4-chip VPI PCIe Gen5 Mezz Controller to provide connection to the NVIDIA HGX H100 80GB 700W 4-GPU Board. The HGX 4-GPU board gets four x16 connection. The choice of GPU riser is based on the need for NVIDIA GPU Direct and the I/O Front network connections.

The slots at the rear of the server are 2-slot risers. The mechanical cage has a third slot at the top which does not support an adapter, but is instead of use either for a serial port or for a RAID adapter supercap. Adapter slots are as follows:

- Riser BR7N has one PCIe 5.0 x16 slots
- Riser BR7L has two PCIe 4.0 x16 slots. It supports PCIe 5.0 on the bottom slot (slot 15 and slot 20). It supports PCIe 5.0 on top slot depending on configuration.
- Riser BR7M has one PCIe 4.0 x16 slot (bottom slot) and one PCIe 4.0 x8 slot (top slot)

The following figure shows the rear riser.

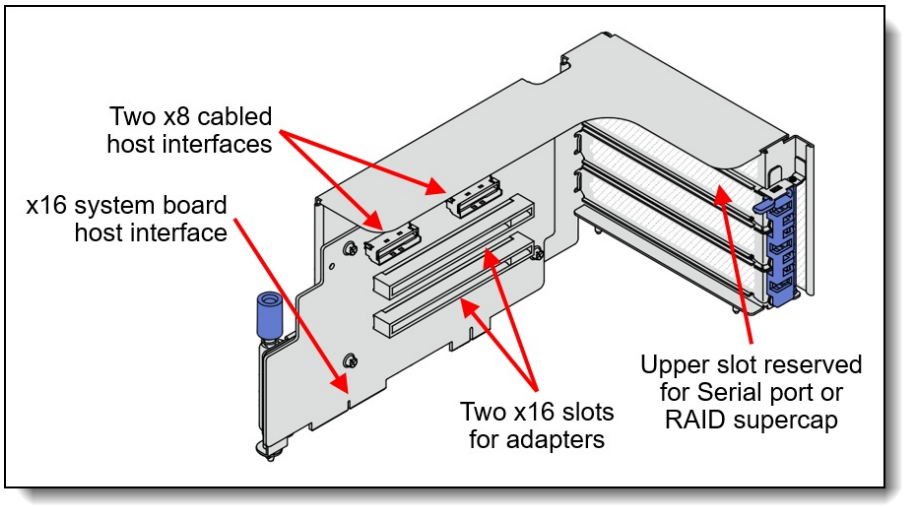

Figure 14. Rear riser

Serial port

The SR675 V3 optionally supports an RS-232 serial port by adding a COM port bracket to either rear riser cage in the top slot position. This position is not used by any adapter so there is no loss of PCIe slot availability, however the location is shared with the RAID supercap.

Note: The serial port is only supported in configurations with rear slots. The table in the Configurations section indicates which configurations have rear slots.

Table 26. Serial port

Part number	Feature code	Description	Maximum supported
CTO only	BFGR	ThinkSystem SR670 V2 / SR675 V3 Rear Serial Port	1

GPU adapters

The SR675 V3 supports the following graphics processing units (GPUs), depending on the front shuttle selected. All GPUs installed must be identical.

Table 27. Supported GPUs

Option PN	FC Name	Long Description	Form factor	SR675 V3 support		
				SXM5 model	4-DW GPU model	8-DW GPU model
CTO only	BQQV	ThinkSystem NVIDIA HGX H100 80GB 700W 4-GPU Board	SXM5	1	No support	No support
4X67A82257	BR9U	ThinkSystem NVIDIA H100 80GB PCIe Gen5 Passive GPU	Double wide	No support	4 / Future support**	8 / Future support**
4X67A76715	BLK1	ThinkSystem NVIDIA A100 80GB PCIe Gen4 Passive GPU	Double wide	No support	4	8
CTO only	BQZP	ThinkSystem NVIDIA A100 80GB PCIe Gen4 Passive GPU w/o CEC	Double wide	No support	4	8
4X67A81102	BP04	ThinkSystem AMD Instinct MI210 PCIe Gen4 Passive Accelerator	Double wide	No support	4	8
4X67A76581	BJHG	ThinkSystem NVIDIA A30 24GB PCIe Gen4 Passive GPU w/o CEC	Double wide	No support	4	8
CTO only	BQZR	ThinkSystem NVIDIA A30 24GB PCIe Gen4 Passive GPU w/o CEC	Double wide	No support	4	8
4X67A72593	BQZQ	ThinkSystem NVIDIA A40 48GB PCIe Gen4 Passive GPU w/o CEC	Double wide	No support	4	8
4X67A90669	BYFH	ThinkSystem NVIDIA L40S 48GB PCIe Gen4 Passive GPU	Double wide	No support	4	8
4X67A84823	BT87	ThinkSystem NVIDIA L40 48GB PCIe Gen4 Passive GPU	Double wide	No support	4	8
4X67A86324	BUGD	ThinkSystem NVIDIA A800 80GB PCIe Gen4 Passive GPU w/o CEC*	Double wide	No support	4	8
4X67A86451	BUJW	ThinkSystem NVIDIA H800 80GB PCIe Gen5 Passive GPU*	Double wide	No support	4	8
4X67A89326	BXEJ	ThinkSystem NVIDIA H800 NVL 94GB PCIe Gen5 Passive GPU*	Double wide	No support	4	8
4X67A89325	BXAK	ThinkSystem NVIDIA H100 NVL 94GB PCIe Gen5 Passive GPU	Double wide	No support	4	8

*CN, Hong Kong and Macao only

Note: ** **Future support**: H100 GPU 4X67A82257 (up to 4) on 4-DW chassis or H100 GPU 4X67A82257 (up to 8) on 8-DW chassis.

Configuration rules:

- Some NVIDIA A Series GPUs are available as two feature codes, one with a CEC chip and one without a CEC chip (ones without the CEC chip have "w/o CEC" in the name). The CEC is a secondary Hardware Root of Trust (RoT) module that provides an additional layer of security, which can be used by customers who have high regulatory requirements or high security standards. NVIDIA uses a multi-layered security model and hence the protection offered by the primary Root of Trust embedded in the GPU is expected to be sufficient for most customers. The CEC defeatured products still offer Secure Boot, Secure Firmware Update, Firmware Rollback Protection, and In-Band Firmware Update Disable. Specifically, without the

CEC chip, the GPU does not support Key Revocation or Firmware Attestation. CEC and non-CEC GPUs of the same type of GPU can be mixed in field upgrades.

- The double-wide GPUs also support the installation of an NVLink bridge between adjacent pairs of GPUs. H100 and A100 GPUs use three NVLink bridges per pair. A40 and A30 GPUs support one NVLink bridge per pair. Ordering information in the following table.

Table 28. NVLink bridge

Part number	Feature code	Description	Quantity supported
4X67A71309	BG3F	ThinkSystem NVIDIA Ampere NVLink 2-Slot Bridge	H100, A100: 3 per pair of GPUs A40, A30: 1 per pair

For information about these GPUs, see the ThinkSystem GPU Summary, available at:
https://lenovopress.com/lp0768-thinksystem-thinkagile-gpu-summary

When adding a double-wide GPU as a field upgrade, you will need an additional GPU auxiliary power cable as listed in the following table.

Table 29. GPU auxiliary power cable part number

Part number	Feature code	Description	Purpose	Maximum supported
4X97A84509	BRGU	ThinkSystem SR675 V3 GPU Power Cable Kit	Auxiliary power cable for all DW GPUs except the H100 PCIe GPU (BR9U) and L40 (BT87)	8
4X97A84510	BSD2	ThinkSystem SR675 V3 Supplemental Power Cable for H100 GPU Option	Auxiliary power cable for the H100 PCIe GPU (BR9U) and L40 (BT87)	8

Network adapters

The server has a dedicated OCP 3.0 SFF slot with either a PCIe 4.0 x8 or x16 host interface, depending on the server configuration as described in the Configurations section. See Figure 3 for the location of the OCP slot.

Note: Some configurations do not include connectivity to the OCP slot. See the Configurations section for details.

The following table lists the supported OCP adapters. One port can optionally be shared with the XCC management processor for Wake-on-LAN and NC-SI support. Only 1 OCP card can be installed in the server.

Table 30. Supported OCP adapters

Part number	Feature code	Description	Maximum supported	PCIe interface
Gigabit Ethernet				
4XC7A8277	B93E	ThinkSystem Intel I350 1GbE RJ45 4-port OCP Ethernet Adapter	1	PCIe 4.0 x8
10 Gb Ethernet RJ45 Adapters				
4XC7A08278	BCD5	ThinkSystem Intel X710-T2L 10GBASE-T 2-port OCP Ethernet Adapter	1	PCIe 4.0 x16
4XC7A80268	BPPY	ThinkSystem Intel X710-T4L 10GBASE-T 4-Port OCP Ethernet Adapter	1	PCIe 4.0 x16
25 Gb Ethernet				
4XC7A80567	BPPW	ThinkSystem Broadcom 57504 10/25GbE SFP28 4-Port OCP Ethernet Adapter	1	PCIe 4.0 x16
4XC7A08294	BCD4	ThinkSystem Intel E810-DA2 10/25GbE SFP28 2-Port OCP Ethernet Adapter	1	PCIe 4.0 x8
4XC7A80269	BP8L	ThinkSystem Intel E810-DA4 10/25GbE SFP28 4-Port OCP Ethernet Adapter	1	PCIe 4.0 x16
4XC7A62582	BE4T	ThinkSystem Mellanox ConnectX-6 Lx 10/25GbE SFP28 2-Port OCP Ethernet Adapter	1	PCIe 4.0 x8
100 Gb Ethernet				
4XC7A08243	BPPX	ThinkSystem Broadcom 57508 100GbE QSFP56 2-Port OCP Ethernet Adapter	1	PCIe 4.0 x16

For more information, including the transceivers and cables that each adapter supports, see the list of Lenovo Press Product Guides in the Networking adapters category:
https://lenovopress.com/servers/options/ethernet

The following table lists additional supported network adapters that can be installed in the regular PCIe slots (not the GPU slots).

Table 31. Supported PCIe Network Adapters

Part number	Feature code	Description	Maximum supported	Slots supported
Gigabit Ethernet				
7ZT7A00535	AUZW	ThinkSystem Intel I350-T4 PCIe 1Gb 4-Port RJ45 Ethernet Adapter	4	1, 2, 15, 16, 20, 21
25 Gb Ethernet				
4XC7A80566	BNWM	ThinkSystem Broadcom 57504 10/25GbE SFP28 4-Port PCIe Ethernet Adapter	4	1, 2, 16, 21, 15, 20
4XC7A08295	BCD6	ThinkSystem Intel E810-DA2 10/25GbE SFP28 2-Port PCIe Ethernet Adapter	4	1, 2, 15, 16, 20, 21
4XC7A80267	BP8M	ThinkSystem Intel E810-DA4 10/25GbE SFP28 4-Port PCIe Ethernet Adapter	4	1, 2, 16, 21, 15, 20
4XC7A62580	BE4U	ThinkSystem Mellanox ConnectX-6 Lx 10/25GbE SFP28 2-Port PCIe Ethernet Adapter	4	1, 2, 15, 16, 20, 21
100 Gb Ethernet				
4XC7A08297	BK1J	ThinkSystem Broadcom 57508 100GbE QSFP56 2-port PCIe 4 Ethernet Adapter	6	1, 2, 16, 21, 15, 20
4XC7A08248	B8PP	ThinkSystem Mellanox ConnectX-6 Dx 100GbE QSFP56 2-port PCIe Ethernet Adapter	6	1, 2, 16, 21, 15, 20
4C57A80293	BNDQ	ThinkSystem Nvidia NDR 2xPCIe Gen4 Aux Kit	1	2, 15*
200 Gb Ethernet / Data Processing Units (DPUs)				
4XC7A87752	BVBG	ThinkSystem NVIDIA BlueField-3 VPI QSFP112 2P 200G PCIe Gen5 x16**	2	1, 2
200 Gb Ethernet / Infiniband HDR				
4C57A15326	B4RC	ThinkSystem Mellanox ConnectX-6 HDR/200GbE QSFP56 1-port PCIe 4 VPI Adapter	6	1, 2, 16, 21, 15, 20
4XC7A81883	BQBN	ThinkSystem NVIDIA ConnectX-7 NDR200/HDR QSFP112 2-Port PCIe Gen5 x16 InfiniBand Adapter	6	1, 2, 16, 21, 15, 20
400 Gb Ethernet				
4XC7A80289	BQ1N	ThinkSystem NVIDIA ConnectX-7 NDR400 OSFP 1-Port PCIe Gen5 Adapter	6	1, 2, 16, 21, 15, 20

* See configuration requirements below

For more information, including the transceivers and cables that each adapter supports, see the list of Lenovo Press Product Guides in the Networking adapters category:
https://lenovopress.com/servers/options/ethernet

Configuration requirements:

- **Mellanox NDR PCIe Aux Kit**: The combination of the Mellanox Aux adapter (BNDQ) and Mellanox ConnectX-6 HDR/200GbE VPI adapter (B4RC) implements SharedIO. The Aux adapter installs in either slot 2, 16 or 21 and the HDR adapter installs in slot 1, 15 or 20 respectively.

**Auxiliary power cable is required to provide power for the adapter. ThinkSystem SR675 V3 BlueField-3 Power Cable (BXB6). Available CTO only / part number (Planned for 3Q/2023).

OSFP800 ports

The SR675 V3 includes an I/O mezzanine board containing four NVIDIA ConnectX-7 VPI network controllers. The board is automatically included in the order.

Table 32. Networking mezzanine board

Part number	Feature code	Description
CTO only	BQQU	ThinkSystem NVIDIA ConnectX-7 4-chip VPI PCIe Gen5 Mezz Controller*

* Future support

The mezzanine board has two connectors where an OSFP board is attached via cables as shown in the following figure. The server makes use of OSFP-DD (double-density) connections to double the bandwidth from 400 Gb/s to 800 Gb/s per physical port.

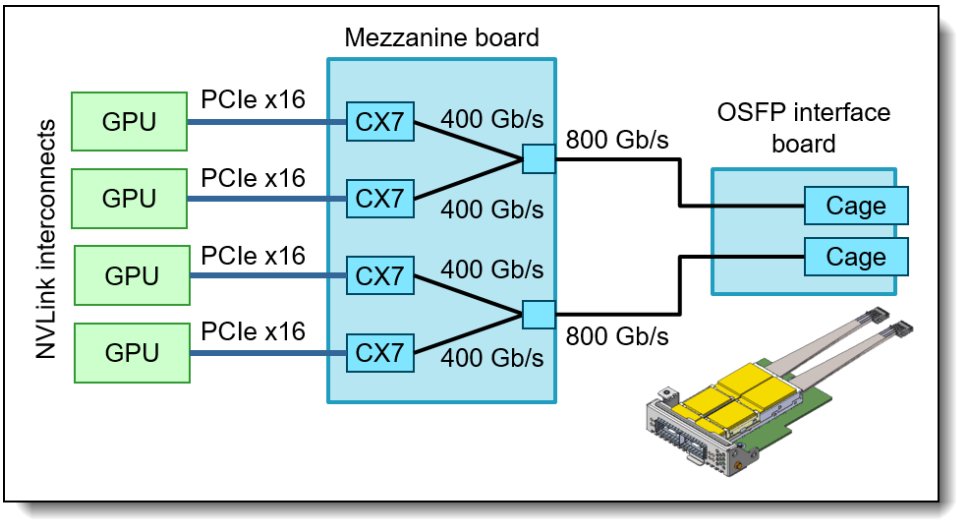

Figure 15. GPU Direct connectivity in the SR675 V3

The SR675 V3 supports OSFP boards with either two double-400 Gb/s interfaces or two 400 Gb/s interfaces, resulting in full NDR InfiniBand or NDR200 InfiniBand bandwidth per GPU. The choices areas listed in the following table.

Table 33. OSFP interfaces

Part number	Feature code	Description	Bandwidth per cage	Max Qty
CTO only	BRUH	ThinkSystem SR675 V3 400Gb OSFP Port Card*	400 Gb/s	1
CTO only	BR7K	ThinkSystem SR675 V3 800Gb OSFP Port Card*	800 Gb/s	1

* Future support

Fibre Channel host bus adapters

The following table lists the Fibre Channel HBAs supported by the SR675 V3

Table 34. Supported PCIe Network Adapters

Part number	Feature code	Description	Maximum supported	Slots supported
32 Gb Fibre Channel HBAs				
4XC7A76525	BJ3H	ThinkSystem Emulex LPe35002 32Gb 2-port PCIe Fibre Channel Adapter v2	6	1, 2, 15, 16, 20, 21

For more information, see the list of Lenovo Press Product Guides in the Host bus adapters category:
https://lenovopress.com/servers/options/hba

SAS adapters for external storage

The following table lists SAS HBAs and RAID adapters supported by SR675 V3 server for use with external storage.

Table 35. Adapters for external storage

Part number	Feature code	Description	Maximum supported	Slots supported
SAS HBAs				
4Y37A78837	BNWK	ThinkSystem 430-8e SAS/SATA 12Gb HBA	6	1, 2, 15, 16, 20, 21
4Y37A09724	B8P7	ThinkSystem 440-16e SAS/SATA PCIe Gen4 12Gb HBA	6	1, 2, 15, 16, 20, 21
External RAID adapters				
4Y37A78836	BNWJ	ThinkSystem RAID 940-8e 4GB Flash PCIe Gen4 12Gb Adapter	1*	15, 16, 20, 21

* See below regarding supercap requirements

For a comparison of the functions of the supported external storage adapters, see the ThinkSystem RAID Adapter and HBA Reference:
https://lenovopress.com/lp1288#sr675-v3-support=SR675%20V3&internal-or-external-ports=External

The RAID 940-8e use a flash power module (supercap), however the server only supports the installation of 1 supercap as described in the RAID flash power module (supercap) support section. As a result, if the internal storage is connected to a RAID 9350 or 940 adapter with supercap, then the use of a RAID 940-8e is not supported.

For more information, see the list of Lenovo Press Product Guides in the Host bus adapters and RAID adapters categories:

https://lenovopress.com/servers/options/hba
https://lenovopress.com/servers/options/raid

Cooling

The SR675 V3 server has up to five 80 mm dual-rotor variable-speed simple-swap fans. Fans are N+1 rotor redundant, tolerating a single-rotor failure. All fans are standard. The server also has one or two additional fans integrated in each of the four power supplies.

These fans have the following electrical input, monitoring, and control connections.

- 12V DC Power
- DC Power Return
- Tachometer Output
- Pulse Width Modulation Control

Power supplies

The SR675 V3 has two or four redundant hot-swap power supplies depending on the configuration, as listed in the following table.

Table 36. Power supplies

	Required power supply capacity and quantity		
Configuration	**1800W**	**2400W**	**2600W**
SXM5 model	4 (N+0)	3 (N+0) 4 (N+1)	3 (N+0) 4 (N+1)
4-DW GPU model	3 (N+0) 4 (N+1)	2 (N+0) 3 (N+0) 4 (N+1)	2 (N+0) 3 (N+1) 4 (N+N)
8-DW GPU model	4 (N+0)	3 (N+0) 4 (N+1)	3 (N+0) 4 (N+1)

SR675 V3 will support the following power policies:

- Power non-redundant – N+0
- Power Redundancy – N+N, N+1
- Power Restore Policy – Always Off, Restore, Always On
  - Determine how the system behaves when AC power is applied based on state before power was removed.
- **Note:**
  - Power capping is not a supported feature
  - Zero output mode is not supported

The power supply choices are listed in the following table.

Tip: When configuring a server in the DCSC configurator, power consumption is calculated precisely by interfacing with Lenovo Capacity Planner. You can therefore select the appropriate power supply for your configuration. However, do consider future upgrades that may require additional power needs.

Table 37. Power supply options

Part number	Feature	Description	Connector	Quantity supported	110V AC	220V AC	240V DC China only
4P57A78359	BPK9	ThinkSystem 1800W 230V Titanium Hot-Swap Gen2 Power Supply	C14	4	No	Yes	Yes
4P57A70040	BFPT	ThinkSystem 2400W 230V Platinum Hot-Swap Gen2 Power Supply	C20	2 - 4	No	Yes	Yes
4P57A26295	B962	ThinkSystem 2400W 230V Platinum Hot-Swap Gen2 Power Supply	C20	2 - 4	No	Yes	Yes
4P57A72667	BKTJ	ThinkSystem 2600W 230V Titanium Hot-Swap Gen2 Power Supply	C20	2 - 4	No	Yes	Yes

Power supply options do not include a line cord. For server configurations, the inclusion of a power cord is model dependent. Configure-to-order models can be configured without power cords if desired.

Power cords (C13 connectors)

Line cords and rack power cables with C13 connectors can be ordered as listed in the following table.

Table 38. Power cords

Part number	Feature code	Description
Rack cables		
00Y3043	A4VP	1.0m, 10A/100-250V, C13 to C14 Jumper Cord
4L67A08367	B0N5	1.0m, 13A/100-250V, C13 to C14 Jumper Cord
39Y7937	6201	1.5m, 10A/100-250V, C13 to C14 Jumper Cord
4L67A08368	B0N6	1.5m, 13A/100-250V, C13 to C14 Jumper Cord
4L67A08365	B0N4	2.0m, 10A/100-250V, C13 to IEC 320-C14 Rack Power Cable
4L67A08369	6570	2.0m, 13A/100-250V, C13 to C14 Jumper Cord
4L67A08366	6311	2.8m, 10A/100-250V, C13 to C14 Jumper Cord
4L67A08370	6400	2.8m, 13A/100-250V, C13 to C14 Jumper Cord
39Y7932	6263	4.3m, 10A/100-250V, C13 to C14 Jumper Cord
4L67A08371	6583	4.3m, 13A/100-250V, C13 to C14 Jumper Cord
Line cords		
39Y7930	6222	2.8m, 10A/250V, C13 to IRAM 2073 (Argentina) Line Cord
81Y2384	6492	4.3m, 10A/250V, C13 to IRAM 2073 (Argentina) Line Cord
39Y7924	6211	2.8m, 10A/250V, C13 to AS/NZS 3112 (Australia/NZ) Line Cord
81Y2383	6574	4.3m, 10A/250V, C13 to AS/NZS 3112 (Australia/NZ) Line Cord
69Y1988	6532	2.8m, 10A/250V, C13 to NBR 14136 (Brazil) Line Cord
81Y2387	6404	4.3m, 10A/250V, C13 to NBR 14136 (Brazil) Line Cord
39Y7928	6210	2.8m, 10A/220V, C13 to GB 2099.1 (China) Line Cord
81Y2378	6580	4.3m, 10A/250V, C13 to GB 2099.1 (China) Line Cord
39Y7918	6213	2.8m, 10A/250V, C13 to DK2-5a (Denmark) Line Cord
81Y2382	6575	4.3m, 10A/250V, C13 to DK2-5a (Denmark) Line Cord
39Y7917	6212	2.8m, 10A/250V, C13 to CEE 7/7 (Europe) Line Cord

Part number	Feature code	Description
81Y2376	6572	4.3m, 10A/250V, C13 to CEE 7/7 (Europe) Line Cord
39Y7927	6269	2.8m, 10A/250V, C13 to IS 6538 (India) Line Cord
81Y2386	6567	4.3m, 10A/250V, C13 to IS 6538 (India) Line Cord
39Y7920	6218	2.8m, 10A/250V, C13 to SI 32 (Israel) Line Cord
81Y2381	6579	4.3m, 10A/250V, C13 to SI 32 (Israel) Line Cord
39Y7921	6217	2.8m, 10A/250V, C13 to CEI 23-16 (Italy) Line Cord
81Y2380	6493	4.3m, 10A/250V, C13 to CEI 23-16 (Italy) Line Cord
4L67A08362	6495	4.3m, 12A/200V, C13 to JIS C-8303 (Japan) Line Cord
39Y7922	6214	2.8m, 10A/250V, C13 to SABS 164-1 (South Africa) Line Cord
81Y2379	6576	4.3m, 10A/250V, C13 to SANS 164-1 (South Africa) Line Cord
39Y7925	6219	2.8m, 12A/220V, C13 to KSC 8305 (S. Korea) Line Cord
81Y2385	6494	4.3m, 12A/250V, C13 to KSC 8305 (S. Korea) Line Cord
39Y7919	6216	2.8m, 10A/250V, C13 to SEV 1011-S24507 (Swiss) Line Cord
81Y2390	6578	4.3m, 10A/250V, C13 to SEV 1011-S24507 (Swiss) Line Cord
81Y2375	6317	2.8m, 10A/250V, C13 to CNS 10917 (Taiwan) Line Cord
81Y2389	6531	4.3m, 10A/250V, C13 to CNS 10917 (Taiwan) Line Cord
39Y7923	6215	2.8m, 10A/250V, C13 to BS 1363/A (UK) Line Cord
81Y2377	6577	4.3m, 10A/250V, C13 to BS 1363/A (UK) Line Cord
46M2592	A1RF	2.8m, 10A/250V, C13 to NEMA 6-15P (US) Line Cord
4L67A08361	6373	4.3m, 10A/250V, C13 to NEMA 6-15P (US) Line Cord

Power cords (C19 connectors)

Line cords and rack power cables with C19 connectors can be ordered as listed in the following table.

Table 39. Power cords (C19 connectors)

Part number	Feature code	Description
Rack cables		
4L67A86677	BPJ0	0.5m, 16A/100-250V, C19 to IEC 320-C20 Rack Power Cable
4L67A86678	B4L0	1.0m, 16A/100-250V, C19 to IEC 320-C20 Rack Power Cable
4L67A86679	B4L1	1.5m, 16A/100-250V, C19 to IEC 320-C20 Rack Power Cable
4L67A86680	B4L2	2.0m, 16A/100-250V, C19 to IEC 320-C20 Rack Power Cable
39Y7916	6252	2.5m, 16A/100-240V, C19 to IEC 320-C20 Rack Power Cable
4L67A86681	B4L3	4.3m, 16A/100-250V, C19 to IEC 320-C20 Rack Power Cable
Line cords		
40K9777	6276	4.3m, 220-240V, C19 to IRAM 2073 (Argentina) Line cord
40K9773	6284	4.3m, 220-240V, C19 to AS/NZS 3112 (Aus/NZ) Line cord
40K9775	6277	4.3m, 250V, C19 to NBR 14136 (Brazil) Line Cord
40K9774	6288	4.3m, 220-240V, C19 to GB2099.1 (China) Line cord
40K9769	6283	4.3m, 16A/230V, C19 to IEC 309-P+N+G (Den/Sws) Line Cord
40K9766	6279	4.3m, 220-240V, C19 to CEE7-VII (European) Line cord
40K9776	6285	4.3m, 220-240V, C19 to IS6538 (India) Line cord
40K9771	6282	4.3m, 220-240V, C19 to SI 32 (Israel) Line cord
40K9768	6281	4.3m, 220-240V, C19 to CEI 23-16 (Italy) Line cord

Part number	Feature code	Description
40K9770	6280	4.3m, 220-240V, C19 to SABS 164 (South Africa) Line cord
41Y9231	6289	4.3m, 15A/250V, C19 to KSC 8305 (S. Korea) Line Cord
81Y2391	6549	4.3m, 16A/230V, C19 to SEV 1011 (Sws) Line Cord
41Y9230	6287	4.3m, 16A/250V, C19 to CNS 10917-3 (Taiwan) Line Cord
40K9767	6278	4.3m, 220-240V, C19 to BS 1363/A w/13A fuse (UK) Line Cord
40K9772	6275	4.3m, 16A/208V, C19 to NEMA L6-20P (US) Line Cord
00D7197	A1NV	4.3m, 15A/250V, C19 to NEMA 6-15P (US) Line Cord

Systems management

The SR675 V3 contains an integrated service processor, XClarity Controller 2 (XCC), which provides advanced control, monitoring, and alerting functions. The XCC2 is based on the AST2600 baseboard management controller (BMC) using a dual-core ARM Cortex A9 service processor.

Topics in this section:

- System I/O Board
- Local management
- System status with XClarity Mobile
- Remote management
- XCC2 Platinum
- Lenovo XClarity Provisioning Manager
- Lenovo XClarity Administrator
- Lenovo XClarity Integrators
- Lenovo XClarity Essentials
- Lenovo XClarity Energy Manager
- Lenovo Capacity Planner
- Lenovo HPC & AI Software Stack

System I/O Board

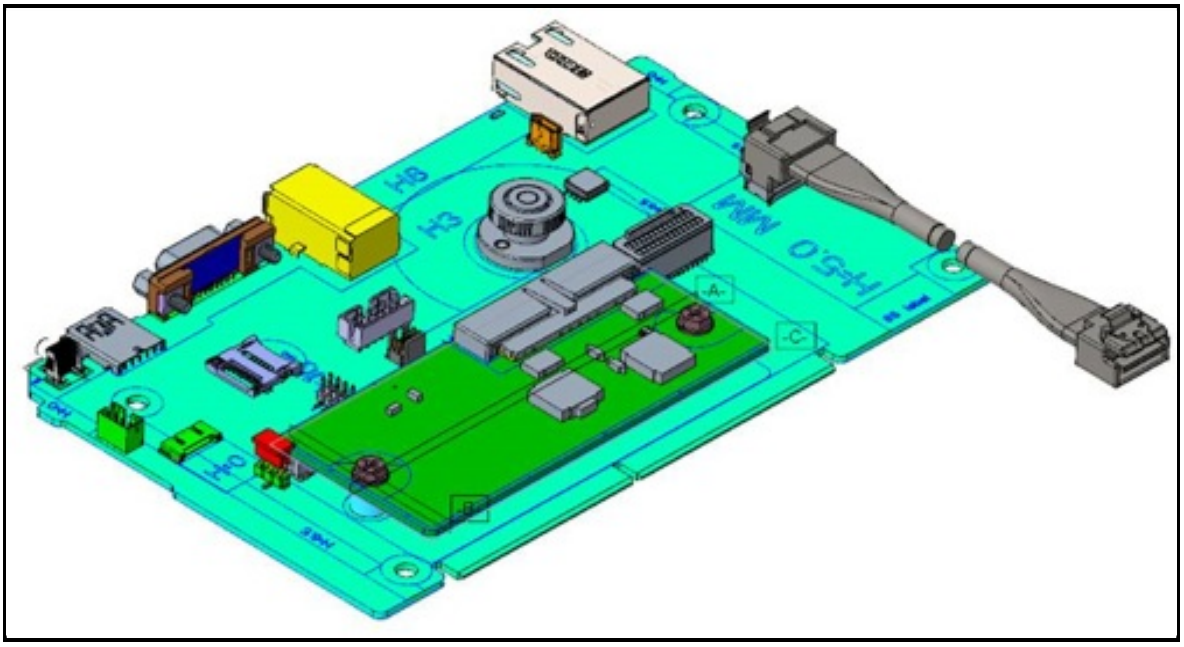

Figure 16. SR675 V3 System I/O Board

The board also has the following components:

- Root of Trust (RoT) module - an optional daughter card that implements Platform Firmware Resiliency (PFR) hardware Root of Trust (RoT) which enables the server to be NIST SP800-193 compliant. For more details about PFR, see the Security section.
- Connector to enable an additional redundant Ethernet connection to the XCC2 controller. The connector is used in conjuction with the ThinkSystem Redundant System Management Port Adapter. For details, see the Remote management section.
- Internal USB port - to allow the booting of an operating system from a USB key. The VMware ESXi preloads use this port for example. Preloads are described in the Operating system support section.
- MicroSD card port to enable the use of a MicroSD card for additional storage for use with the XCC2 controller. XCC2 can use the storage as a Remote Disc on Card (RDOC) device (up to 4GB of storage). It can also be used to store firmware updates (including N-1 firmware history) for ease of deployment.

Tip: Without a MicroSD card installed, the XCC2 controller will have 100MB of available RDOC storage.

Ordering information for the supported USB drive and Micro SD card are listed in the following table.

Table 40. Media for use with the System I/O Board

Part number	Feature code	Description
4X77A77065	BNWN	ThinkSystem USB 32GB USB 3.0 Flash Drive
4X77A77064	BNWP	ThinkSystem MicroSD 32GB Class 10 Flash Memory Card

Local management

The SR675 V3 offers a front operator panel with key LED status indicators, as shown in the following figure. Note that the Network LED only shows network activity of the installed OCP network adapter.

Most configurations support front operator ports, mounted in a slot, for local management. The ports are the following:

- USB 2.0 port with support for XClarity Mobile through a tablet or smart phone
- USB 3.1 G1 port
- External diagnostics port
- VGA port

The only configuration that does not support the front operator ports is the one with 8x double-wide GPUs and front I/O slots, since there is no physical space for the operator ports. See the Components and connectors section for the location of the front operator ports in each configuration.

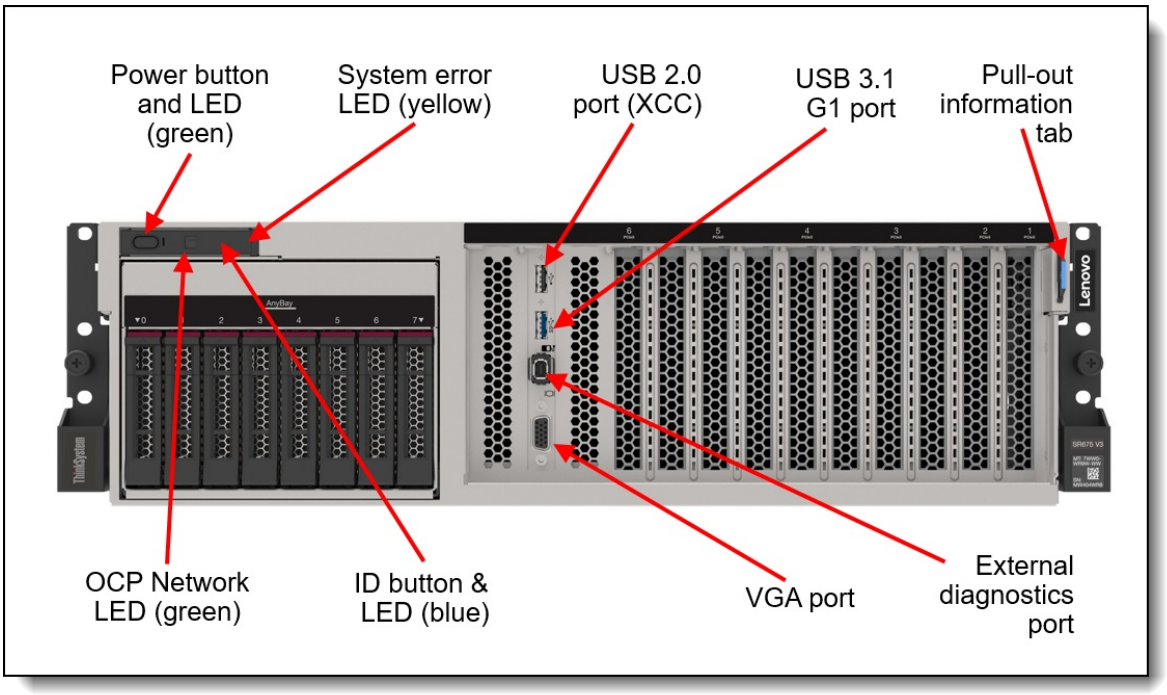

Figure 17. SR675 V3 operator controls

The front operator ports are optional. Ordering information is listed in the following table.

Table 41. Ordering information

Part number	Feature code	Description	SXM5 model	4-DW GPU model	8-DW GPU model Rear I/O	8-DW GPU model Front I/O
CTO only	BRUD	ThinkSystem SR675 V3 Front Video/USB/Diagnostic for 4-DW GPU model	No	Supported	No	No
CTO only	BRUE	ThinkSystem SR675 V3 Front Video/USB/Diagnostic for SXM5 and 8-DW GPU Rear IO model	Supported	No	Supported	No

Light path diagnostics

The server offers light path diagnostics. If an environmental condition exceeds a threshold or if a system component fails, XCC lights LEDs inside the server to help you diagnose the problem and find the failing part. The server has fault LEDs next to the following components:

- Each processor
- Each memory DIMM
- Each drive bay
- Each system fan
- Each power supply

External Diagnostics Handset

SXM5 models and 4-DW GPU models of the SR675 V3 have a port to connect an External Diagnostics Handset as shown in the following figure. The External Diagnostics Handset has the same functions as the Integrated Diagnostics Panel but has the advantages of not consuming space on the front of the server plus it can be shared amongst many servers in your data center. The handset has a magnet on the back of it to allow you to easily mount it on a convenient place on any rack cabinet.

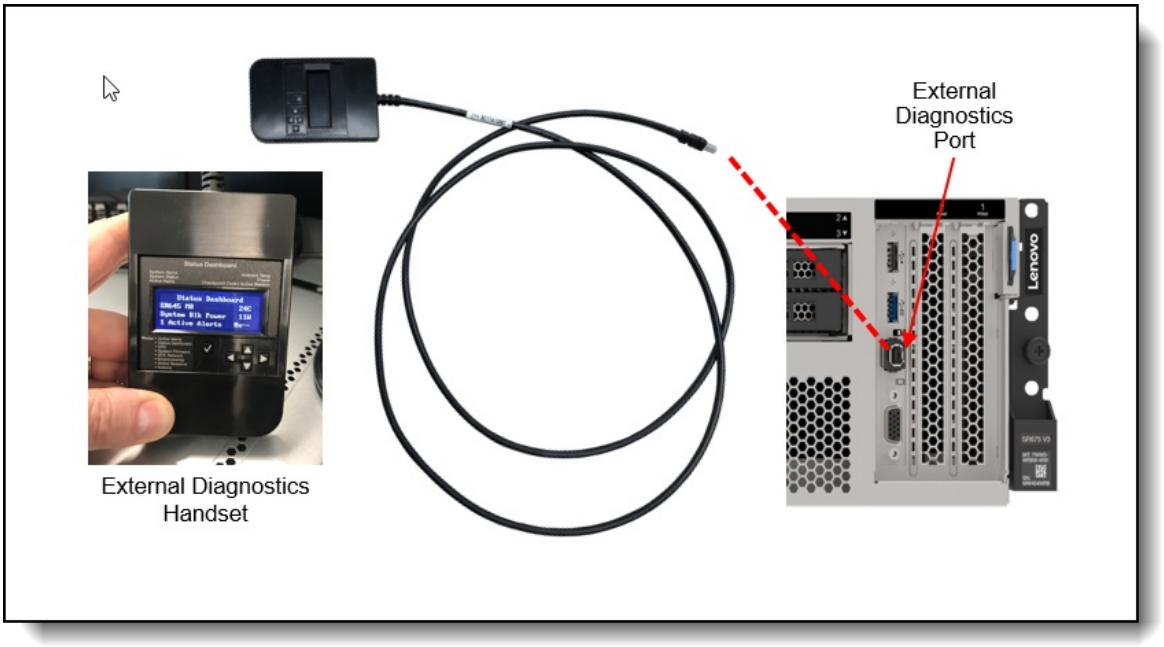

Figure 18. External Diagnostics Handset

Ordering information for the External Diagnostics Handset with is listed in the following table.

Note: The External Diagnostics Handset is not available with configurations supporting 8x double-wide GPUs (8-DW GPU model).

Table 42. External Diagnostics Handset ordering information

Part number	Feature code	Description
4TA7A64874	BEUX	ThinkSystem External Diagnostics Handset

The front of the server also houses an information pull-out tab (also known as the network access tag). See Figures 3 - 5 for the location. A label on the tab shows the network information (MAC address and other data) to remotely access the service processor.

System status with XClarity Mobile

The XClarity Mobile app includes a tethering function where you can connect your Android or iOS device to the server via USB to see the status of the server.

The steps to connect the mobile device are as follows:

1. Enable USB Management on the server, by holding down the ID button for 3 seconds (or pressing the dedicated USB management button if one is present)
2. Connect the mobile device via a USB cable to the server's USB port with the management symbol 
3. In iOS or Android settings, enable Personal Hotspot or USB Tethering

4. Launch the Lenovo XClarity Mobile app

Once connected you can see the following information:

- Server status including error logs (read only, no login required)
- Server management functions (XClarity login credentials required)

Remote management

The server offers a dedicated RJ45 port at the rear of the server for remote management via the XClarity Controller management processor. The port supports 10/100/1000 Mbps speeds.

Remote server management is provided through industry-standard interfaces:

- Intelligent Platform Management Interface (IPMI) Version 2.0
- Simple Network Management Protocol (SNMP) Version 3 (no SET commands; no SNMP v1)
- Common Information Model (CIM-XML)
- Representational State Transfer (REST) support
- Redfish support (DMTF compliant)
- Web browser - HTML 5-based browser interface (Java and ActiveX not required) using a responsive design (content optimized for device being used - laptop, tablet, phone) with NLS support

IPMI via the Ethernet port (IPMI over LAN) is supported, however it is disabled by default. For CTO orders you can specify whether you want to the feature enabled or disabled in the factory, using the feature codes listed in the following table.

Table 43. IPMI-over-LAN settings

Feature code	Description
B7XZ	Disable IPMI-over-LAN (default)
B7Y0	Enable IPMI-over-LAN

XCC2 Platinum

In the SR675 V3, XCC2 has the Platinum level of features built into the server. Compared to the XCC functions of ThinkSystem V2 and earlier systems, Platinum offers the same features as Enterprise and Advanced levels in ThinkSystem V2, plus additional features.

DCSC tip: Even though XCC2 Platinum is a standard feature of the SR675 V3, it does *not* appear in the list of feature codes for the configuration in DCSC.

XCC2 Platinum includes the following Enterprise and Advanced functions:

- Remotely viewing video with graphics resolutions up to 1600x1200 at 75 Hz with up to 23 bits per pixel, regardless of the system state
- Remotely accessing the server using the keyboard and mouse from a remote client
- International keyboard mapping support
- Syslog alerting
- Redirecting serial console via SSH
- Component replacement log (Maintenance History log)
- Access restriction (IP address blocking)
- Lenovo SED security key management
- Displaying graphics for real-time and historical power usage data and temperature
- Boot video capture and crash video capture
- Virtual console collaboration - Ability for up to 6 remote users to be log into the remote session simultaneously
- Remote console Java client

- Mapping the ISO and image files located on the local client as virtual drives for use by the server
- Mounting the remote ISO and image files via HTTPS, SFTP, CIFS, and NFS
- System utilization data and graphic view
- Single sign on with Lenovo XClarity Administrator
- Update firmware from a repository
- License for XClarity Energy Manager

XCC2 Platinum also includes the following features that are new to XCC2:

- System Guard - Monitor hardware inventory for unexpected component changes, and simply log the event or prevent booting
- Enterprise Strict Security mode - Enforces CNSA 1.0 level security
- Neighbor Group - Enables administrators to manage and synchronize configurations and firmware level across multiple servers

With XCC2 Platinum, for CTO orders, you can request that System Guard be enabled in the factory and the first configuration snapshot be recorded. To add this to an order, select feature code listed in the following table. The selection is made in the Security tab of the DCSC configurator.

Table 44. Enable System Guard in the factory (CTO orders)

Feature code	Description
BUT2	Install System Guard

For more information about System Guard, see https://pubs.lenovo.com/xcc2/NN1ia_c_systemguard

Lenovo XClarity Provisioning Manager

Lenovo XClarity Provisioning Manager (LXPM) is a UEFI-based application embedded in ThinkSystem servers and accessible via the F1 key during system boot.

LXPM provides the following functions:

- Graphical UEFI Setup
- System inventory information and VPD update
- System firmware updates (UEFI and XCC)
- RAID setup wizard
- OS installation wizard (including unattended OS installation)
- Diagnostics functions

Lenovo XClarity Administrator

Lenovo XClarity Administrator is a centralized resource management solution designed to reduce complexity, speed response, and enhance the availability of Lenovo systems and solutions. It provides agent-free hardware management for ThinkSystem servers, in addition to ThinkServer, System x, and Flex System servers. The administration dashboard is based on HTML 5 and allows fast location of resources so tasks can be run quickly.

Because Lenovo XClarity Administrator does not require any agent software to be installed on the managed endpoints, there are no CPU cycles spent on agent execution, and no memory is used, which means that up to 1GB of RAM and 1 - 2% CPU usage is saved, compared to a typical managed system where an agent is required.

Lenovo XClarity Administrator is an optional software component for the SR675 V3. The software can be downloaded and used at no charge to discover and monitor the SR675 V3 and to manage firmware upgrades.

If software support is required for Lenovo XClarity Administrator, or premium features such as configuration management and operating system deployment are required, Lenovo XClarity Pro software subscription should be ordered. Lenovo XClarity Pro is licensed on a per managed system basis, that is, each managed Lenovo system requires a license.

The following table lists the Lenovo XClarity software license options.

Table 45. Lenovo XClarity Pro ordering information

Part number	Feature code	Description
00MT201	1339	Lenovo XClarity Pro, per Managed Endpoint w/1 Yr SW S&S
00MT202	1340	Lenovo XClarity Pro, per Managed Endpoint w/3 Yr SW S&S
00MT203	1341	Lenovo XClarity Pro, per Managed Endpoint w/5 Yr SW S&S
7S0X000HWW	SAYV	Lenovo XClarity Pro, per Managed Endpoint w/6 Yr SW S&S
7S0X000JWW	SAYW	Lenovo XClarity Pro, per Managed Endpoint w/7 Yr SW S&S

Lenovo XClarity Administrator offers the following standard features that are available at no charge:

- Auto-discovery and monitoring of Lenovo systems
- Firmware updates and compliance enforcement
- External alerts and notifications via SNMP traps, syslog remote logging, and e-mail
- Secure connections to managed endpoints
- NIST 800-131A or FIPS 140-2 compliant cryptographic standards between the management solution and managed endpoints
- Integration into existing higher-level management systems such as cloud automation and orchestration tools through REST APIs, providing extensive external visibility and control over hardware resources
- An intuitive, easy-to-use GUI
- Scripting with Windows PowerShell, providing command-line visibility and control over hardware resources

Lenovo XClarity Administrator offers the following premium features that require an optional Pro license:

- Pattern-based configuration management that allows to define configurations once and apply repeatedly without errors when deploying new servers or redeploying existing servers without disrupting the fabric
- Bare-metal deployment of operating systems and hypervisors to streamline infrastructure provisioning

For more information, refer to the Lenovo XClarity Administrator Product Guide:
http://lenovopress.com/tips1200

Lenovo XClarity Integrators

Lenovo also offers software plug-in modules, Lenovo XClarity Integrators, to manage physical infrastructure from leading external virtualization management software tools including those from Microsoft and VMware.

These integrators are offered at no charge, however if software support is required, a Lenovo XClarity Pro software subscription license should be ordered.

Lenovo XClarity Integrators offer the following additional features:

- Ability to discover, manage, and monitor Lenovo server hardware from VMware vCenter or Microsoft System Center
- Deployment of firmware updates and configuration patterns to Lenovo x86 rack servers and Flex System from the virtualization management tool
- Non-disruptive server maintenance in clustered environments that reduces workload downtime by dynamically migrating workloads from affected hosts during rolling server updates or reboots
- Greater service level uptime and assurance in clustered environments during unplanned hardware events by dynamically triggering workload migration from impacted hosts when impending hardware failures are predicted

For more information about all the available Lenovo XClarity Integrators, see the Lenovo XClarity Administrator Product Guide: https://lenovopress.com/tips1200-lenovo-xclarity-administrator

Lenovo XClarity Essentials

Lenovo offers the following XClarity Essentials software tools that can help you set up, use, and maintain the server at no additional cost:

- Lenovo Essentials OneCLI

  OneCLI is a collection of server management tools that uses a command line interface program to manage firmware, hardware, and operating systems. It provides functions to collect full system health information (including health status), configure system settings, and update system firmware and drivers.

- Lenovo Essentials UpdateXpress

  The UpdateXpress tool is a standalone GUI application for firmware and device driver updates that enables you to maintain your server firmware and device drivers up-to-date and help you avoid unnecessary server outages. The tool acquires and deploys individual updates and UpdateXpress System Packs (UXSPs) which are integration-tested bundles.

- Lenovo Essentials Bootable Media Creator

  The Bootable Media Creator (BOMC) tool is used to create bootable media for offline firmware update.

For more information and downloads, visit the Lenovo XClarity Essentials web page:
http://support.lenovo.com/us/en/documents/LNVO-center

Lenovo XClarity Energy Manager

Lenovo XClarity Energy Manager (LXEM) is a power and temperature management solution for data centers. It is an agent-free, web-based console that enables you to monitor and manage power consumption and temperature in your data center through the management console. It enables server density and data center capacity to be increased through the use of power capping.

LXEM is a licensed product. A single-node LXEM license is included with the XClarity Controller Platinum upgrade as described in the Remote Management section. If your server does not have the XCC Platinum upgrade, Energy Manager licenses can be ordered as shown in the following table.

Table 46. Lenovo XClarity Energy Manager

Part number	Description
4L40E51621	Lenovo XClarity Energy Manager Node License (1 license needed per server)

Note: The SR675 V3 does not support the following Energy Manager functions:

- Power capping
- Policy-based management

For more information about XClarity Energy Manager, see the following resources:

- Lenovo Support page:
  https://datacentersupport.lenovo.com/us/en/solutions/lnvo-lxem
- Lenovo Information Center:
  https://sysmgt.lenovofiles.com/help/topic/LXEM/lxem_overview.html?cp=4

Lenovo Capacity Planner

Lenovo Capacity Planner is a power consumption evaluation tool that enhances data center planning by enabling IT administrators and pre-sales professionals to understand various power characteristics of racks, servers, and other devices. Capacity Planner can dynamically calculate the power consumption, current, British Thermal Unit (BTU), and volt-ampere (VA) rating at the rack level, improving the planning efficiency for large scale deployments.

For more information, refer to the Capacity Planner web page:
http://datacentersupport.lenovo.com/us/en/solutions/lnvo-lcp

Lenovo HPC & AI Software Stack

The Lenovo HPC & AI Software Stack combines open-source with proprietary best-of-breed Supercomputing software to provide the most consumable open-source HPC software stack embraced by all Lenovo HPC customers.

It provides a fully tested and supported, complete but customizable HPC software stack to enable the administrators and users in optimally and environmentally sustainable utilizing their Lenovo Supercomputers.

The Lenovo HPC & AI Software Stack is built on the most widely adopted and maintained HPC community software for orchestration and management. It integrates third party components especially around programming environments and performance optimization to complement and enhance the capabilities, creating the organic umbrella in software and service to add value for our customers.

The key open-source components of the software stack are:

- Confluent Management

Confluent is Lenovo-developed open-source software designed to discover, provision, and manage HPC clusters and the nodes that comprise them. Confluent provides powerful tooling to deploy and update software and firmware to multiple nodes simultaneously, with simple and readable modern software syntax.

- SLURM Orchestration

Slurm is integrated as an open source, flexible, and modern choice to manage complex workloads for faster processing and optimal utilization of the large-scale and specialized high-performance and AI resource capabilities needed per workload provided by Lenovo systems. Lenovo provides support in partnership with SchedMD.

- LiCO Webportal

Lenovo Intelligent Computing Orchestration (LiCO) is a Lenovo-developed consolidated Graphical User Interface (GUI) for monitoring, managing and using cluster resources. The webportal provides workflows for both AI and HPC, and supports multiple AI frameworks, including TensorFlow, Caffe, Neon, and MXNet, allowing you to leverage a single cluster for diverse workload requirements.

- Energy Aware Runtime

EAR is a powerful European open-source energy management suite supporting live-optimization during the application runtime. Lenovo is collaborating with Barcelona Supercomputing Centre (BSC) and EAS4DC on the continuous development and support and offers three versions with differentiating capabilities.

For more information and the many more packages and choices, see the Lenovo HPC & AI Software Stack product guide.

Security

The server offers the following electronic security features:

- Administrator and power-on password
- Trusted Platform Module (TPM) supporting TPM 2.0 (no support for TPM 1.2)
- Optional Nationz TPM 2.0, available only in China (CTO only)

The server is NIST SP 800-147B compliant.

The SR675 V3 server also includes the following physical security features:

- Chassis intrusion switch

The following table lists the security features for the SR675 V3.

Table 47. Security features

Feature code	Description
BFNU	ThinkSystem SR670 V2/ SR675 V3 Intrusion Cable

Platform Firmware Resiliency - Lenovo ThinkShield

Lenovo's ThinkShield Security is a transparent and comprehensive approach to security that extends to all dimensions of our data center products: from development, to supply chain, and through the entire product lifecycle.

The ThinkSystem SR675 V3 includes Platform Firmware Resiliency (PFR) hardware Root of Trust (RoT) which enables the system to be NIST SP800-193 compliant. This offering further enhances key platform subsystem protections against unauthorized firmware updates and corruption, to restore firmware to an integral state, and to closely monitor firmware for possible compromise from cyber attacks.

PFR operates upon the following server components:

- UEFI image – the low-level server firmware that connects the operating system to the server hardware
- XCC image – the management “engine” software that controls and reports on the server status separate from the server operating system
- FPGA image – the code that runs the server’s lowest level hardware controller on the motherboard

The Lenovo Platform Root of Trust Hardware performs the following three main functions:

- Detection – Measures the firmware and updates for authenticity
- Recovery – Recovers a corrupted image to a known-safe image
- Protection – Monitors the system to ensure the known-good firmware is not maliciously written

These enhanced protection capabilities are implemented using a dedicated, discrete security processor whose implementation has been rigorously validated by leading third-party security firms. Security evaluation results and design details are available for customer review – providing unprecedented transparency and assurance.

The SR675 V3 includes support for Secure Boot, a UEFI firmware security feature developed by the UEFI Consortium that ensures only immutable and signed software are loaded during the boot time. The use of Secure Boot helps prevent malicious code from being loaded and helps prevent attacks, such as the installation of rootkits. Lenovo offers the capability to enable secure boot in the factory, to ensure end-to-end protection.

The following table lists the relevant feature code(s).

Table 48. Secure Boot options

Part number	Feature code	Description	Purpose
CTO only	BPKQ	TPM 2.0 with Secure Boot	Configure the system in the factory with Secure Boot enabled.

Security standards

The SR675 V3 supports the following security standards and capabilities:

- **Industry Standard Security Capabilities**
  - AMD CPU Enablement
    - AES-NI (Advanced Encryption Standard New Instructions)
    - GMET (Guest Mode Execute Trap)

        - Hardware-based side channel attack resilience enhancements
        - NX (No eXecute)
        - PSB (Platform Secure Boot)
        - Shadow Stack
        - SEV (Secure Encrypted Virtualization)
        - SEV-ES (Encrypted State register encryption)
        - SEV-SNP (Secure Nested Paging)
        - SVM (Secure Virtual Machine)
        - SME (Secure Memory Encryption)
        - UMIP (User Mode Instruction Prevention)
    - Microsoft Windows Security Enablement
        - Credential Guard
        - Device Guard
        - Host Guardian Service
    - TCG (Trusted Computing Group) TPM (Trusted Platform Module) 2.0
    - UEFI (Unified Extensible Firmware Interface) Forum Secure Boot
- **Hardware Root of Trust and Security**
    - Independent security subsystem providing platform-wide NIST SP800-193 compliant Platform Firmware Resilience (PFR)
    - Host domain RoT supplemented by AMD Platform Secure Boot (PSB)
    - Management domain RoT supplemented by the Secure Boot features of XCC
- **Platform Security**

  For more information on platform security, see the paper “How to Harden the Security of your ThinkSystem Server and Management Applications” available from https://lenovopress.com/lp1260-how-to-harden-the-security-of-your-thinksystem-server.

    - Boot and run-time firmware integrity monitoring with rollback to known-good firmware (e.g., “self-healing”)
    - Non-volatile storage bus security monitoring and filtering
    - Resilient firmware implementation, such as to detect and defeat unauthorized flash writes or SMM (System Management Mode) memory incursions
    - Patented IPMI KCS channel privileged access authorization (USPTO Patent# 11,256,810)
    - Host and management domain authorization, including integration with CyberArk for enterprise password management
    - KMIP (Key Management Interoperability Protocol) compliant, including support for IBM SKLM and Thales KeySecure
    - Reduced “out of box” attack surface
    - Configurable network services
    - FIPS 140-3 (in progress) validated cryptography for XCC
    - CNSA Suite 1.0 Quantum-resistant cryptography for XCC
    - Lenovo System Guard
- **Standards Compliance and/or Support**
    - NIST SP800-131A rev 2 “Transitioning the Use of Cryptographic Algorithms and Key Lengths”
    - NIST SP800-147B “BIOS Protection Guidelines for Servers”
    - NIST SP800-193 “Platform Firmware Resiliency Guidelines”
    - ISO/IEC 11889 “Trusted Platform Module Library”
    - Common Criteria TCG Protection Profile for “PC Client Specific TPM 2.0”
    - European Union Commission Regulation 2019/424 (“ErP Lot 9”) “Ecodesign Requirements for Servers and Data Storage Products” Secure Data Deletion
    - Optional FIPS 140-2 validated Self-Encrypting Disks (SEDs) with external KMIP-based key

management

- **Product and Supply Chain Security**
  - Suppliers validated through Lenovo's Trusted Supplier Program
  - Developed in accordance with Lenovo's Secure Development Lifecycle (LSDL)
  - Continuous firmware security validation through automated testing, including static code analysis, dynamic network and web vulnerability testing, software composition analysis, and subsystem-specific testing, such as UEFI security configuration validation
  - Ongoing security reviews by US-based security experts, with attestation letters available from our third-party security partners
  - Digitally signed firmware, stored and built on US-based infrastructure and signed on US-based Hardware Security Modules (HSMs)
  - Manufacturing transparency via Intel Transparent Supply Chain (for details, see https://lenovopress.com/lp1434-introduction-to-intel-transparent-supply-chain-on-lenovo-thinksystem-servers)
  - TAA (Trade Agreements Act) compliant manufacturing, by default in Mexico for North American markets with additional US and EU manufacturing options
  - US 2019 NDAA (National Defense Authorization Act) Section 889 compliant

Rack installation

The following table lists the rack installation options that are available for the SR675 V3.

Table 49. Rack installation options

Option	Feature Code	Description
Rail Kits		
4M17A69408	BFTL	ThinkSystem SR670 V2/ SR675 V3 Toolless Slide Rail (contains left & right rails and a screw kit)

The Slide Rail has the following specifications:

- Rail travel distance is 920 mm (36.22 inches)
- Can be installed in both square hole and round hole rack
- Rack cabinet requirements:
  - Minimum depth of 150 mm (5.9 inches) between the front mounting flanges and inside of the front door.
  - Minimum depth of 125 mm (4.9 inches) between the chassis rear wall and inside of the rear door.
  - The maximum distance between the front and rear mounting flanges is 813 mm (32 inches).
  - If you want to install the rails and a 0U PDU into the same rack, the rack must be at least 1185mm (46.7 inches) deep

The following figure shows the SR675 V3 Toolless Slide Rail.

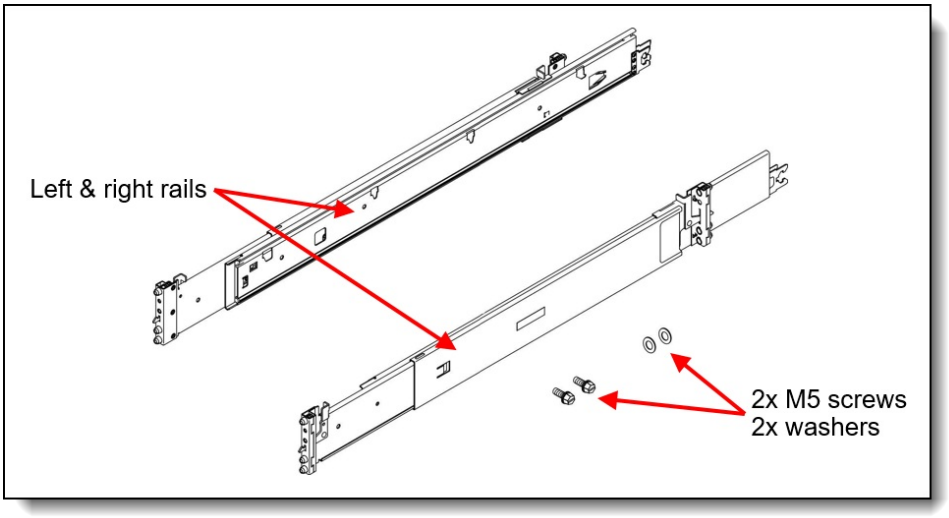

Figure 19. ThinkSystem SR675 V3 Toolless Slide Rail contents

Operating system support

The server supports the following operating systems

- Microsoft Windows Server 2019
- Microsoft Windows Server 2022
- Red Hat Enterprise Linux 8.6
- Red Hat Enterprise Linux 8.7
- Red Hat Enterprise Linux 8.8
- Red Hat Enterprise Linux 9.0
- Red Hat Enterprise Linux 9.1
- Red Hat Enterprise Linux 9.2
- SUSE Linux Enterprise Server 15 SP4
- SUSE Linux Enterprise Server 15 SP5
- SUSE Linux Enterprise Server 15 Xen SP4
- SUSE Linux Enterprise Server 15 Xen SP5
- Ubuntu 20.04 LTS 64-bit
- Ubuntu 22.04 LTS 64-bit
- VMware ESXi 7.0 U3
- VMware ESXi 8.0
- VMware ESXi 8.0 U2

The SR675 V3 node is also tested with Rocky Linux and Alma Linux.

For a complete list of supported, certified and tested operating systems, plus additional details and links to relevant web sites, see the Operating System Interoperability Guide:
https://lenovopress.com/osig

For configure-to-order configurations, the server can be preloaded with VMware ESXi installed on M.2 cards. Ordering information is listed in the following table.

Table 50. VMware ESXi preload

Part number	Feature code	Description
CTO only	BMEY	VMware ESXi 7.0 U3 (Factory Installed)
CTO only	BMT5	VMware ESXi 8.0 U1 (Factory Installed)

You can download supported VMware vSphere hypervisor images from the following web page and load it on the M.2 drives using the instructions provided:
https://vmware.lenovo.com/content/custom_iso/

Physical and electrical specifications

The SR675 V3 has the following overall physical dimensions, excluding components that extend outside the standard chassis, such as EIA flanges, front security bezel (if any), and power supply handles:

- Width: 448 mm (17.6 inches)
- Height: 131 mm (5.2 inches) (3U)
- Depth: 892 mm (35.1 inches)

The following table lists the detailed dimensions. See the figure below for the definition of each dimension.

Table 51. Detailed dimensions

Dimension	Description
483 mm	X_a = Width, to the outsides of the front EIA flanges
434.3 mm	X_b = Width, to the rack rail mating surfaces
447.7 mm	X_c = Width, to the outer most chassis body feature
131 mm	Y_a = Height, from the bottom of chassis to the top of the chassis
825 mm	Z_a = Depth, from the rack flange mating surface to the rearmost I/O port surface
856 mm	Z_b = Depth, from the rack flange mating surface to the rearmost feature of the chassis body
884 mm (1800W PSU) 912 mm (2600W PSU)	Z_c = Depth, from the rack flange mating surface to the rearmost feature such as power supply handle
36 mm	Z_d = Depth, from the forwardmost feature on front of EIA flange to the rack flange mating surface
39 mm	Z_e = Depth, from the front of security bezel (if applicable) or forwardmost feature to the rack flange mating surface

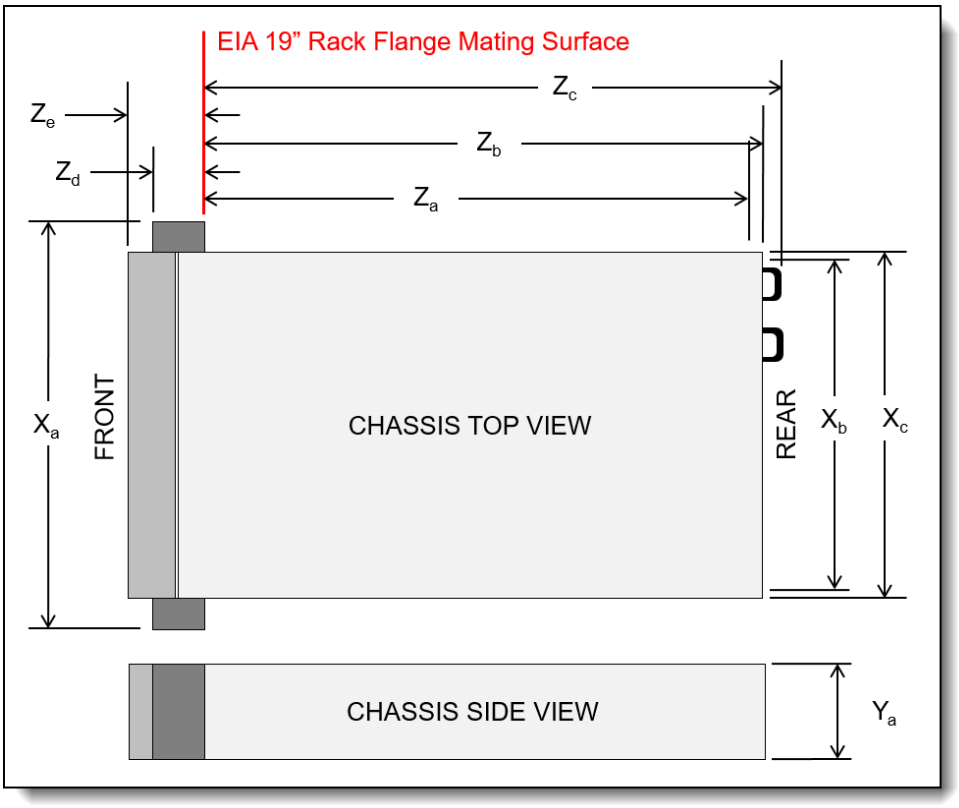

Figure 20. Server dimensions

The shipping dimensions (cardboard packaging) of the SR675 V3 are as follows:

- Width: 590 mm (23.2 inches)
- Height: 329 mm (13.0 inches)
- Depth: 1159 mm (45.6 inches)

The server has the following approximate weight, dependent on the configuration selected:

- SXM5 model: 39.5 kg (87 lb)
- 4-DW GPU model: 36.7 kg (81 lb)

- 8-DW GPU model: 39 kg (86 lb)

Electrical specifications for AC input power supplies:

- Input voltage:
  - 200 to 240 (nominal) Vac, 50 Hz or 60 Hz
  - 180 to 300 Vdc (China only)
- Inlet current:
  - 1800W power supply: 10 A
  - 2400W power supply: 14 A

Operating environment

The SR675 V3 server complies with ASHRAE Class A2 specifications. System performance may be impacted when operating temperature is outside ASHRAE A2 specification.

Depending on the hardware configuration, the SR675 V3 server also complies with ASHRAE Class H1 specification. System performance may be impacted when operating temperature is outside ASHRAE H1 specification.

Configuration restrictions

- With NVIDIA HGX H100 80GB 700W 4-GPU Board (feature BQQV) installed, if the ambient temperature is above 30°C, the GPUs may be instructed by the system to enter an emergency power reduction state whereby GPU performance will be impacted.
- Keep ambient temperature to 30°C or lower when one or more of the following components are installed.
  - NVIDIA H100/H800 PCIe GPU adapter
  - NVIDIA ConnectX-7 dual-port NDR200 or single-port NDR400 with Active Optical Cable installed in the PCIe slot 15, 16, 20, or 21

Temperature and humidity

The server is supported in the following environment:

- Air temperature:
  - Operating:
    - ASHRAE Class A2: 10°C to 35°C (50°F to 95°F); the maximum ambient temperature decreases by 1°C for every 300 m (984 ft) increase in altitude above 900 m (2,953 ft).
    - ASHRAE Class H1: 5 °C to 25 °C (41 °F to 77 °F); Decrease the maximum ambient temperature by 1°C for every 500 m (1640 ft) increase in altitude above 900 m (2,953 ft).
  - Server off: 5°C to 45°C (41°F to 113°F)
  - Shipment/storage: -40°C to 60°C (-40°F to 140°F)
- Maximum altitude: 3,050 m (10,000 ft)
- Relative Humidity (non-condensing):
  - Operating:
    - ASHRAE Class A2: 8% to 80%; maximum dew point: 21°C (70°F)
    - ASHRAE Class H1: 8% to 80%; Maximum dew point: 17°C (63°F)
  - Shipment/storage: 8% to 90%

Heat output

The server generates the following heat:

- Heat/thermal output:
  - 2x 1800W power supplies: 8164 BTU/hr, 2394 W
  - 4x 1800W power supplies: 16327 BTU/hr, 4788 W
  - 2x 2400W power supplies: 8802 BTU/hr, 2580 W
  - 4x 2400W power supplies: 17609 BTU/hr, 5161 W
  - 2x 2600W power supplies: 10656 BTU/hr, 3128 W
  - 4x 2600W power supplies: 21313 BTU/hr, 6250 W

Acoustical noise emissions

The server has the following acoustic noise emissions declaration:

- Sound power level (L_{WAd}):
  - Idling: 8.4 Bel (GPU Typical), 8.4 Bel (GPU Max)
  - Operating: 8.4 Bel (GPU Typical), 8.6 Bel (GPU Max)
- Sound pressure level (L_{pAm}):
  - Idling: 68 dBA (GPU Typical), 68 dBA (GPU Max)
  - Operating: 68 dBA (GPU Typical), 71.3 dBA (GPU Max)

Notes:

- These sound levels were measured in controlled acoustical environments according to procedures specified by ISO7779 and are reported in accordance with ISO 9296.
- The declared acoustic sound levels are based on the following configurations, which may change slightly depending on configuration/conditions.
  - GPU Typical configuration: 2x 360W processors, 4x or 8x NVIDIA A100 80 GB GPU adapters, 12x 32 GB RDIMMs (2Rx8), 2x 2.5-inch NVMe SSDs or 2x E1.S 5.9mm NVMe SSDs, 1x ThinkSystem Broadcom 57504 10/25GbE SFP28 4-Port OCP Ethernet Adapter, 1x 1P NDR (NVIDIA ConnectX-7 card)
  - GPU Max configuration: 2x 360W processors, 4x NVIDIA H100 80 GB GPU adapters, 24x 128 GB 3DS RDIMMs, 8x 2.5-inch NVMe SSDs or 6x E1.S 5.9mm NVMe SSDs, 1x ThinkSystem Broadcom 57508 100GbE QSFP56 2-Port OCP Ethernet Adapter, 6x 1P NDR (NVIDIA ConnectX-7 card)
- The declared acoustic noise levels may increase greatly, if high-power components are installed such as high-power NICs, high-power processors and GPUs.
- Government regulations (such as those prescribed by OSHA or European Community Directives) may govern noise level exposure in the workplace and may apply to you and your server installation. The actual sound pressure levels in your installation depend upon a variety of factors, including the number of racks in the installation; the size, materials, and configuration of the room; the noise levels from other equipment; the room ambient temperature, and employee's location in relation to the equipment. Further, compliance with such government regulations depends on a variety of additional factors, including the duration of employees' exposure and whether employees wear hearing protection. Lenovo recommends that you consult with qualified experts in this field to determine whether you are in compliance with the applicable regulations.

Shock and vibration

The server has the following vibration and shock limits:

- Vibration:
  - Operating: 0.21 G rms at 5 Hz to 500 Hz for 15 minutes across 3 axes
  - Non-operating: 1.04 G rms at 2 Hz to 200 Hz for 15 minutes across 6 surfaces
- Shock:
  - Operating: 15 G for 3 milliseconds in each direction (positive and negative X, Y, and Z axes)
  - Non-operating:
    - 23 kg - 31 kg: 35 G for 152 in./sec velocity change across 6 surfaces
    - 32 kg - 68 kg: 35 G for 136 in./sec velocity change across 6 surfaces

Particulate contamination

Airborne particulates (including metal flakes or particles) and reactive gases acting alone or in combination with other environmental factors such as humidity or temperature might damage the system that might cause the system to malfunction or stop working altogether.

The following specifications indicate the limits of particulates that the system can tolerate:

- Reactive gases:
  - The reactivity rate of copper coupons shall be less than 200 Angstroms per month (Å/month)
  - The reactivity rate of silver coupons shall be less than 200 Å/month
- Airborne particulates:
  - The room air should be continuously filtered with MERV 8 filters.
  - Air entering a data center should be filtered with MERV 11 or preferably MERV 13 filters.
  - The deliquescent relative humidity of the particulate contamination should be more than 60% RH
  - Data centers must be free of zinc whiskers

For additional information, see the Specifications section of the Setup Guide for the server, available from the Lenovo Documents site, https://pubs.lenovo.com/

Warranty and Support

The SR675 V3 has a 1-year or 3-year warranty based on the machine type of the system:

- 7D9Q - 1 year warranty
- 7D9R - 3 year warranty

The standard warranty terms are customer-replaceable unit (CRU) and onsite (for field-replaceable units FRUs only) with standard call center support during normal business hours and 9x5 Next Business Day Parts Delivered.

Lenovo's additional support services provide a sophisticated, unified support structure for your data center, with an experience consistently ranked number one in customer satisfaction worldwide. Available offerings include:

- **Premier Support**

  Premier Support provides a Lenovo-owned customer experience and delivers direct access to technicians skilled in hardware, software, and advanced troubleshooting, in addition to the following:

  - Direct technician-to-technician access through a dedicated phone line
  - 24x7x365 remote support
  - Single point of contact service
  - End to end case management
  - Third-party collaborative software support
  - Online case tools and live chat support
  - On-demand remote system analysis
- **Warranty Upgrade (Preconfigured Support)**

  Services are available to meet the on-site response time targets that match the criticality of your systems.

  - 3, 4, or 5 years of service coverage
  - 1-year or 2-year post-warranty extensions
  - **Foundation Service**: 9x5 service coverage with next business day onsite response. YourDrive YourData is an optional extra (see below).
  - **Essential Service:** 24x7 service coverage with 4-hour onsite response or 24-hour committed repair (available only in select markets). Bundled with YourDrive YourData.
  - **Advanced Service:** 24x7 service coverage with 2-hour onsite response or 6-hour committed repair (available only in select markets). Bundled with YourDrive YourData.

- **Managed Services**

  Lenovo Managed Services provides continuous 24x7 remote monitoring (plus 24x7 call center availability) and proactive management of your data center using state-of-the-art tools, systems, and practices by a team of highly skilled and experienced Lenovo services professionals.

  Quarterly reviews check error logs, verify firmware & OS device driver levels, and software as needed. We'll also maintain records of latest patches, critical updates, and firmware levels, to ensure you systems are providing business value through optimized performance.

- **Technical Account Management (TAM)**

  A Lenovo Technical Account Manager helps you optimize the operation of your data center based on a deep understanding of your business. You gain direct access to your Lenovo TAM, who serves as your single point of contact to expedite service requests, provide status updates, and furnish reports to track incidents over time. In addition, your TAM will help proactively make service recommendations and manage your service relationship with Lenovo to make certain your needs are met.

- **Enterprise Server Software Support**

  Enterprise Software Support is an additional support service providing customers with software support on Microsoft, Red Hat, SUSE, and VMware applications and systems. Around the clock availability for critical problems plus unlimited calls and incidents helps customers address challenges fast, without incremental costs. Support staff can answer troubleshooting and diagnostic questions, address product comparability and interoperability issues, isolate causes of problems, report defects to software vendors, and more.

- **YourDrive YourData**

  Lenovo's YourDrive YourData is a multi-drive retention offering that ensures your data is always under your control, regardless of the number of drives that are installed in your Lenovo server. In the unlikely event of a drive failure, you retain possession of your drive while Lenovo replaces the failed drive part. Your data stays safely on your premises, in your hands. The YourDrive YourData service can be purchased in convenient bundles and is optional with Foundation Service. It is bundled with Essential Service and Advanced Service.

- **Health Check**

  Having a trusted partner who can perform regular and detailed health checks is central to maintaining efficiency and ensuring that your systems and business are always running at their best. Health Check supports Lenovo-branded server, storage, and networking devices, as well as select Lenovo-supported products from other vendors that are sold by Lenovo or a Lenovo-Authorized Reseller.

Examples of region-specific warranty terms are second or longer business day parts delivery or parts-only base warranty.

If warranty terms and conditions include onsite labor for repair or replacement of parts, Lenovo will dispatch a service technician to the customer site to perform the replacement. Onsite labor under base warranty is limited to labor for replacement of parts that have been determined to be field-replaceable units (FRUs). Parts that are determined to be customer-replaceable units (CRUs) do not include onsite labor under base warranty.

If warranty terms include parts-only base warranty, Lenovo is responsible for delivering only replacement parts that are under base warranty (including FRUs) that will be sent to a requested location for self-service. Parts-only service does not include a service technician being dispatched onsite. Parts must be changed at customer's own cost and labor and defective parts must be returned following the instructions supplied with the spare parts.

Lenovo Service offerings are region-specific. Not all preconfigured support and upgrade options are available in every region. For information about Lenovo service upgrade offerings that are available in your region, refer to the following resources:

- Service part numbers in Lenovo Data Center Solution Configurator (DCSC): http://dcsc.lenovo.com/#/services
- Lenovo Services Availability Locator http://lenovolocator.com/

For service definitions, region-specific details, and service limitations, please refer to the following documents:

- Lenovo Statement of Limited Warranty for Infrastructure Solutions Group (ISG) Servers and System Storage
  http://pcsupport.lenovo.com/us/en/solutions/ht503310
- Lenovo Data Center Services Agreement
  http://support.lenovo.com/us/en/solutions/ht116628

Services

Lenovo Services is a dedicated partner to your success. Our goal is to reduce your capital outlays, mitigate your IT risks, and accelerate your time to productivity.

Note: Some service options may not be available in all markets or regions. For more information, go to https://www.lenovo.com/services. For information about Lenovo service upgrade offerings that are available in your region, contact your local Lenovo sales representative or business partner.

Here's a more in-depth look at what we can do for you:

- **Asset Recovery Services**

  Asset Recovery Services (ARS) helps customers recover the maximum value from their end-of-life equipment in a cost-effective and secure way. On top of simplifying the transition from old to new equipment, ARS mitigates environmental and data security risks associated with data center equipment disposal. Lenovo ARS is a cash-back solution for equipment based on its remaining market value, yielding maximum value from aging assets and lowering total cost of ownership for your customers. For more information, see the ARS page, https://lenovopress.com/lp1266-reduce-e-waste-and-grow-your-bottom-line-with-lenovo-ars.

- **Assessment Services**

  An Assessment helps solve your IT challenges through an onsite, multi-day session with a Lenovo technology expert. We perform a tools-based assessment which provides a comprehensive and thorough review of a company's environment and technology systems. In addition to the technology based functional requirements, the consultant also discusses and records the non-functional business requirements, challenges, and constraints. Assessments help organizations like yours, no matter how large or small, get a better return on your IT investment and overcome challenges in the ever-changing technology landscape.

- **Design Services**

  Professional Services consultants perform infrastructure design and implementation planning to support your strategy. The high-level architectures provided by the assessment service are turned into low level designs and wiring diagrams, which are reviewed and approved prior to implementation. The implementation plan will demonstrate an outcome-based proposal to provide business capabilities through infrastructure with a risk-mitigated project plan.

- **Basic Hardware Installation**

  Lenovo experts can seamlessly manage the physical installation of your server, storage, or networking hardware. Working at a time convenient for you (business hours or off shift), the technician will unpack and inspect the systems on your site, install options, mount in a rack cabinet, connect to power and network, check and update firmware to the latest levels, verify operation, and dispose of the packaging, allowing your team to focus on other priorities.

- **Deployment Services**

  When investing in new IT infrastructures, you need to ensure your business will see quick time to value with little to no disruption. Lenovo deployments are designed by development and engineering teams who know our Products & Solutions better than anyone else, and our technicians own the process from delivery to completion. Lenovo will conduct remote preparation and planning, configure & integrate systems, validate systems, verify and update appliance firmware, train on administrative tasks, and provide post-deployment documentation. Customer's IT teams leverage our skills to enable IT staff to transform with higher level roles and tasks.

- **Integration, Migration, and Expansion Services**

  Move existing physical & virtual workloads easily, or determine technical requirements to support increased workloads while maximizing performance. Includes tuning, validation, and documenting ongoing run processes. Leverage migration assessment planning documents to perform necessary migrations.

Regulatory compliance

The SR675 V3 conforms to the following standards:

- ANSI/UL 62368-1
- IEC 62368-1 (CB Certificate and CB Test Report)
- FCC - Verified to comply with Part 15 of the FCC Rules, Class A
- Canada ICES-003, issue 7, Class A
- CSA C22.2 No. 62368-1
- CISPR 32, Class A, CISPR 35
- Japan VCCI, Class A
- Taiwan BSMI CNS15936, Class A; CNS15598-1; Section 5 of CNS15663
- CE, UKCA Mark (EN55032 Class A, EN62368-1, EN55024, EN55035, EN61000-3-2, EN61000-3-3, (EU) 2019/424, and EN IEC 63000 (RoHS))
- Korea KN32, Class A, KN35
- Russia, Belorussia and Kazakhstan, TP EAC 037/2016 (for RoHS)
- Russia, Belorussia and Kazakhstan, EAC: TP TC 004/2011 (for Safety); TP TC 020/2011 (for EMC)
- Australia/New Zealand AS/NZS CISPR 32, Class A; AS/NZS 62368.1
- Energy Star 3.0
- EPEAT (NSF/ ANSI 426) Bronze
- China CCC certificate, GB17625.1; GB4943.1; GB/T9254
- China CECP certificate, CQC3135
- China CELP certificate, HJ 2507-2011
- Japanese Energy-Saving Act
- Mexico NOM-019
- India BIS 13252 (Part 1)
- Germany GS
- Morocco CMIM Certification (CM)
- EU2019/424 Energy Related Product (ErP Lot9)

External drive enclosures

The server supports attachment to external drive enclosures using a RAID controller with external ports or a SAS host bus adapter. Adapters supported by the server are listed in the SAS adapters for external storage section.

Note: Information provided in this section is for ordering reference purposes only. For the operating system and adapter support details, refer to the interoperability matrix for a particular storage enclosure that can be found on the Lenovo Data Center Support web site:
http://datacentersupport.lenovo.com

Table 52. External drive enclosures

Model	Description
4587HC1	Lenovo Storage D1212 Disk Expansion Enclosure (2U enclosure wth 12x LFF drive bays)
4587HC2	Lenovo Storage D1224 Disk Expansion Enclosure (2U enclosure wth 24x SFF drive bays)
6413HC1	Lenovo Storage D3284 High Density Expansion Enclosure (5U enclosure wth 84x LFF drive bays)
7DAHCTO1WW	Lenovo ThinkSystem D4390 Direct Attached Storage (4U enclosure wth 90x LFF drive bays)

For details about supported drives, adapters, and cables, see the following Lenovo Press Product Guides:

- Lenovo Storage D1212 and D1224
  http://lenovopress.lenovo.com/lp0512
- Lenovo Storage D3284
  http://lenovopress.lenovo.com/lp0513
- Lenovo ThinkSystem D4390
  https://lenovopress.lenovo.com/lp1681

External storage systems

Lenovo offers the ThinkSystem DE Series and ThinkSystem DM Series external storage systems for high-performance storage. See the DE Series and DM Series product guides for specific controller models, expansion enclosures and configuration options:

- ThinkSystem DE Series Storage
  https://lenovopress.com/storage/thinksystem/de-series#rt=product-guide
- ThinkSystem DM Series Storage
  https://lenovopress.com/storage/thinksystem/dm-series#rt=product-guide

External backup units

The server supports both USB-attached RDX backup units and SAS-attached tape drives.

The following table lists the available external SAS tape backup options.

Tip: Verify the end-to-end support of an IBM tape backup solution through the IBM System Storage Interoperation Center (SSIC): http://www.ibm.com/systems/support/storage/ssic

Table 53. External SAS backup options

Part number	Description
External SAS tape backup drives	
6160S7E	IBM TS2270 Tape Drive Model H7S
6160S8E	IBM TS2280 Tape Drive Model H8S
6160S9E	IBM TS2290 Tape Drive Model H9S
External SAS tape backup autoloaders	
6171S7R	IBM TS2900 Tape Autoloader w/LTO7 HH SAS
6171S8R	IBM TS2900 Tape Autoloader w/LTO8 HH SAS
6171S9R	IBM TS2900 Tape Autoloader w/LTO9 HH SAS
External tape backup libraries	
6741A1F	IBM TS4300 3U Tape Library-Base Unit
SAS backup drives for TS4300 Tape Library	
01KP937	LTO 7 HH SAS Drive

Part number	Description
01KP953	LTO 8 HH SAS Drive
02JH836	LTO 9 HH SAS Drive

For more information, see the list of Product Guides in the Backup units category:
https://lenovopress.com/servers/options/backup

The following table lists the external RDX backup options available.

Table 54. External RDX dock and cartridges

Part number	Feature code	Description
External RDX docks		
4T27A10725	B32R	ThinkSystem RDX External USB 3.0 Dock (No cartridge included with the drive)
Cartridges		
7TP7A01601	AVF8	ThinkSystem RDX 500GB Cartridge
7TP7A01602	AVF1	ThinkSystem RDX 1TB Cartridge
7TP7A01603	AVF0	ThinkSystem RDX 2TB Cartridge
7TP7A04318	AXD1	ThinkSystem RDX 4TB Cartridge

For more information, see the Lenovo RDX USB 3.0 Disk Backup Solution product guide:
https://lenovopress.com/tips0894-rdx-usb-30

Uninterruptible power supply units

The following table lists the uninterruptible power supply (UPS) units that are offered by Lenovo.

Table 55. Uninterruptible power supply units

Part number	Description
55941AX	RT1.5kVA 2U Rack or Tower UPS (100-125VAC)
55941KX	RT1.5kVA 2U Rack or Tower UPS (200-240VAC)
55942AX	RT2.2kVA 2U Rack or Tower UPS (100-125VAC)
55942KX	RT2.2kVA 2U Rack or Tower UPS (200-240VAC)
55943AX	RT3kVA 2U Rack or Tower UPS (100-125VAC)
55943KX	RT3kVA 2U Rack or Tower UPS (200-240VAC)
55945KX	RT5kVA 3U Rack or Tower UPS (200-240VAC)
55946KX	RT6kVA 3U Rack or Tower UPS (200-240VAC)
55948KX	RT8kVA 6U Rack or Tower UPS (200-240VAC)
55949KX	RT11kVA 6U Rack or Tower UPS (200-240VAC)
55948PX	RT8kVA 6U 3:1 Phase Rack or Tower UPS (380-415VAC)
55949PX	RT11kVA 6U 3:1 Phase Rack or Tower UPS (380-415VAC)
55943KT†	ThinkSystem RT3kVA 2U Standard UPS (200-230VAC) (2x C13 10A, 2x GB 10A, 1x C19 16A outlets)
55943LT†	ThinkSystem RT3kVA 2U Long Backup UPS (200-230VAC) (2x C13 10A, 2x GB 10A, 1x C19 16A outlets)
55946KT†	ThinkSystem RT6kVA 5U UPS (200-230VAC) (2x C13 10A outlets, 1x Terminal Block output)
5594XKT†	ThinkSystem RT10kVA 5U UPS (200-230VAC) (2x C13 10A outlets, 1x Terminal Block output)

† Only available in China and the Asia Pacific market.

For more information, see the list of Product Guides in the UPS category:
https://lenovopress.com/servers/options/ups

Power distribution units

The following table lists the power distribution units (PDUs) that are offered by Lenovo.

Table 56. Power distribution units

Part number	Feature code	Description	ANZ	ASEAN	Brazil	EET	MEA	RUCIS	WE	HTK	INDIA	JAPAN	LA	NA	PRC
0U Basic PDUs															
00YJ776	ATZY	0U 36 C13/6 C19 24A 1 Phase PDU	N	Y	Y	N	N	N	N	N	N	Y	Y	Y	N
00YJ777	ATZZ	0U 36 C13/6 C19 32A 1 Phase PDU	Y	Y	N	Y	Y	Y	Y	Y	Y	N	N	Y	Y
0U Switched and Monitored PDUs															
00YJ783	AU04	0U 12 C13/12 C19 Switched and Monitored 48A 3 Phase PDU	N	N	Y	N	N	N	Y	N	N	Y	Y	Y	N
00YJ781	AU03	0U 20 C13/4 C19 Switched and Monitored 24A 1 Phase PDU	N	N	Y	N	Y	N	Y	N	N	Y	Y	Y	N
1U Switched and Monitored PDUs															
4PU7A81117	BNDV	1U 18 C19/C13 switched and monitored 48A 3P WYE PDU - ETL	N	N	N	N	N	N	N	N	N	N	N	Y	N
4PU7A77467	BLC4	1U 18 C19/C13 Switched and Monitored 80A 3P Delta PDU	N	N	N	N	N	N	N	N	N	Y	N	Y	N
4PU7A77469	BLC6	1U 12 C19/C13 switched and monitored 60A 3P Delta PDU	N	N	N	N	N	N	N	N	N	N	N	Y	N
4PU7A77468	BLC5	1U 12 C19/C13 switched and monitored 32A 3P WYE PDU	Y	Y	Y	Y	Y	Y	Y	Y	Y	N	Y	Y	Y
4PU7A81118	BNDW	1U 18 C19/C13 switched and monitored 48A 3P WYE PDU - CE	Y	Y	Y	Y	Y	Y	Y	Y	Y	N	Y	N	Y
1U Ultra Density Enterprise PDUs (9x IEC 320 C13 + 3x IEC 320 C19 outlets)															
71763NU	6051	Ultra Density Enterprise C19/C13 PDU 60A/208V/3PH	N	N	Y	N	N	N	N	N	N	Y	Y	Y	N
71762NX	6091	Ultra Density Enterprise C19/C13 PDU Module	Y	Y	Y	Y	Y	Y	Y	Y	Y	Y	Y	Y	Y
1U C13 Enterprise PDUs (12x IEC 320 C13 outlets)															
39Y8941	6010	DPI C13 Enterprise PDU Module (WW)	Y	Y	Y	Y	Y	Y	Y	Y	Y	Y	Y	Y	Y
1U Front-end PDUs (3x IEC 320 C19 outlets)															
39Y8938	6002	DPI Single-phase 30A/120V Front-end PDU (US)	Y	Y	Y	Y	Y	Y	Y	Y	Y	Y	Y	Y	Y
39Y8939	6003	DPI Single-phase 30A/208V Front-end PDU (US)	Y	Y	Y	Y	Y	Y	Y	Y	Y	Y	Y	Y	Y
39Y8934	6005	DPI Single-phase 32A/230V Front-end PDU (International)	Y	Y	Y	Y	Y	Y	Y	Y	Y	Y	Y	Y	Y
39Y8940	6004	DPI Single-phase 60A/208V Front-end PDU (US)	Y	N	Y	Y	Y	Y	Y	N	N	Y	Y	Y	N
39Y8935	6006	DPI Single-phase 63A/230V Front-end PDU (International)	Y	Y	Y	Y	Y	Y	Y	Y	Y	Y	Y	Y	Y
1U NEMA PDUs (6x NEMA 5-15R outlets)															
39Y8905	5900	DPI 100-127V NEMA PDU	Y	Y	Y	Y	Y	Y	Y	Y	Y	Y	Y	Y	Y
Line cords for 1U PDUs that ship without a line cord															
40K9611	6504	4.3m, 32A/380-415V, EPDU/IEC 309 3P+N+G 3ph wye (non-US) Line Cord	Y	Y	Y	Y	Y	Y	Y	Y	Y	Y	Y	Y	Y
40K9612	6502	4.3m, 32A/230V, EPDU to IEC 309 P+N+G (non-US) Line Cord	Y	Y	Y	Y	Y	Y	Y	Y	Y	Y	Y	Y	Y

Part number	Feature code	Description	ANZ	ASEAN	Brazil	EET	MEA	RUCIS	WE	HTK	INDIA	JAPAN	LA	NA	PRC
40K9613	6503	4.3m, 63A/230V, EPDU to IEC 309 P+N+G (non-US) Line Cord	Y	Y	Y	Y	Y	Y	Y	Y	Y	Y	Y	Y	Y
40K9614	6500	4.3m, 30A/208V, EPDU to NEMA L6-30P (US) Line Cord	Y	Y	Y	Y	Y	Y	Y	Y	Y	Y	Y	Y	Y
40K9615	6501	4.3m, 60A/208V, EPDU to IEC 309 2P+G (US) Line Cord	N	N	Y	N	N	N	Y	N	N	Y	Y	Y	N
40K9617	6505	4.3m, 32A/230V, Souriau UTG Female to AS/NZ 3112 (Aus/NZ) Line Cord	Y	Y	Y	Y	Y	Y	Y	Y	Y	Y	Y	Y	Y
40K9618	6506	4.3m, 32A/250V, Souriau UTG Female to KSC 8305 (S. Korea) Line Cord	Y	Y	Y	Y	Y	Y	Y	Y	Y	Y	Y	Y	Y

For more information, see the Lenovo Press documents in the PDU category:
https://lenovopress.com/servers/options/pdu

Rack cabinets

To use the SR675 V3 and rail kit with 0U PDUs, the rack cabinet needs to be at least 1185mm (46.7 inches) deep. An 1100mm rack cabinet does not provide sufficient depth.

The following table lists the supported rack cabinets.

Table 57. Rack cabinets

Part number	Description
93072RX	25U Standard Rack (1000mm)
93072PX	25U Static S2 Standard Rack (1000mm)
7D6DA007WW	ThinkSystem 42U Onyx Primary Heavy Duty Rack Cabinet (1200mm)
7D6DA008WW	ThinkSystem 42U Pearl Primary Heavy Duty Rack Cabinet (1200mm)
93604PX	42U 1200mm Deep Dynamic Rack
93614PX	42U 1200mm Deep Static Rack
93634PX	42U 1100mm Dynamic Rack
93634EX	42U 1100mm Dynamic Expansion Rack
93074RX	42U Standard Rack (1000mm)
7D6EA009WW	ThinkSystem 48U Onyx Primary Heavy Duty Rack Cabinet (1200mm)
7D6EA00AWW	ThinkSystem 48U Pearl Primary Heavy Duty Rack Cabinet (1200mm)

For specifications about these racks, see the Lenovo Rack Cabinet Reference, available from:
https://lenovopress.com/lp1287-lenovo-rack-cabinet-reference

For more information, see the list of Product Guides in the Rack cabinets category:
https://lenovopress.com/servers/options/racks

KVM console options

The following table lists the supported KVM consoles.

Table 58. KVM console

Part number	Description
4XF7A84188	ThinkSystem 18.5" LCD Console (with US English keyboard)

The following table lists the available KVM switches and the options that are supported with them.

Table 60. KVM switches and options

Part number	Description
KVM Console switches	
1754D2X	Global 4x2x32 Console Manager (GCM32)
1754D1X	Global 2x2x16 Console Manager (GCM16)
1754A2X	Local 2x16 Console Manager (LCM16)
1754A1X	Local 1x8 Console Manager (LCM8)
Cables for GCM and LCM Console switches	
46M5383	Virtual Media Conversion Option Gen2 (VCO2)
46M5382	Serial Conversion Option (SCO)

For more information, see the list of Product Guides in the KVM Switches and Consoles category: http://lenovopress.com/servers/options/kvm

Lenovo Financial Services

Lenovo Financial Services reinforces Lenovo's commitment to deliver pioneering products and services that are recognized for their quality, excellence, and trustworthiness. Lenovo Financial Services offers financing solutions and services that complement your technology solution anywhere in the world.

We are dedicated to delivering a positive finance experience for customers like you who want to maximize your purchase power by obtaining the technology you need today, protect against technology obsolescence, and preserve your capital for other uses.

We work with businesses, non-profit organizations, governments and educational institutions to finance their entire technology solution. We focus on making it easy to do business with us. Our highly experienced team of finance professionals operates in a work culture that emphasizes the importance of providing outstanding customer service. Our systems, processes and flexible policies support our goal of providing customers with a positive experience.

We finance your entire solution. Unlike others, we allow you to bundle everything you need from hardware and software to service contracts, installation costs, training fees, and sales tax. If you decide weeks or months later to add to your solution, we can consolidate everything into a single invoice.

Our Premier Client services provide large accounts with special handling services to ensure these complex transactions are serviced properly. As a premier client, you have a dedicated finance specialist who manages your account through its life, from first invoice through asset return or purchase. This specialist develops an in-depth understanding of your invoice and payment requirements. For you, this dedication provides a high-quality, easy, and positive financing experience.

For your region-specific offers, please ask your Lenovo sales representative or your technology provider about the use of Lenovo Financial Services. For more information, see the following Lenovo website:

https://www.lenovo.com/us/en/landingpage/lenovo-financial-services/

Related publications and links

For more information, see these resources:

- ThinkSystem SR675 V3 product page:
  https://www.lenovo.com/us/en/p/servers-storage/servers/racks/thinksystem-sr675-v3/len21ts0007
- ThinkSystem SR675 V3 datasheet:
  https://lenovopress.com/ds0151
- Interactive 3D Tour of the ThinkSystem SR675 V3:
  https://lenovopress.lenovo.com/LP1631
- ThinkSystem SR675 V3 drivers and support
  https://datacentersupport.lenovo.com/us/en/products/servers/thinksystem/sr675v3/7d9r/downloads/driver-list/
- Lenovo ThinkSystem SR675 V3 product publications:
  https://pubs.lenovo.com/sr675-v3/
  - Quick Start
  - Rack Installation Guide
  - Setup Guide
  - Hardware Maintenance Manual
  - Messages and Codes Reference
  - Memory Population Reference
- ServerProven hardware compatibility:
  http://www.lenovo.com/us/en/serverproven

Related product families

Product families related to this document are the following:

- 2-Socket Rack Servers
- High Performance Computing
- ThinkSystem SR675 V3 Server

Notices

Lenovo may not offer the products, services, or features discussed in this document in all countries. Consult your local Lenovo representative for information on the products and services currently available in your area. Any reference to a Lenovo product, program, or service is not intended to state or imply that only that Lenovo product, program, or service may be used. Any functionally equivalent product, program, or service that does not infringe any Lenovo intellectual property right may be used instead. However, it is the user's responsibility to evaluate and verify the operation of any other product, program, or service. Lenovo may have patents or pending patent applications covering subject matter described in this document. The furnishing of this document does not give you any license to these patents. You can send license inquiries, in writing, to:

Lenovo (United States), Inc.
8001 Development Drive
Morrisville, NC 27560
U.S.A.
Attention: Lenovo Director of Licensing

LENOVO PROVIDES THIS PUBLICATION ”AS IS” WITHOUT WARRANTY OF ANY KIND, EITHER EXPRESS OR IMPLIED, INCLUDING, BUT NOT LIMITED TO, THE IMPLIED WARRANTIES OF NON-INFRINGEMENT, MERCHANTABILITY OR FITNESS FOR A PARTICULAR PURPOSE. Some jurisdictions do not allow disclaimer of express or implied warranties in certain transactions, therefore, this statement may not apply to you.

This information could include technical inaccuracies or typographical errors. Changes are periodically made to the information herein; these changes will be incorporated in new editions of the publication. Lenovo may make improvements and/or changes in the product(s) and/or the program(s) described in this publication at any time without notice.

The products described in this document are not intended for use in implantation or other life support applications where malfunction may result in injury or death to persons. The information contained in this document does not affect or change Lenovo product specifications or warranties. Nothing in this document shall operate as an express or implied license or indemnity under the intellectual property rights of Lenovo or third parties. All information contained in this document was obtained in specific environments and is presented as an illustration. The result obtained in other operating environments may vary. Lenovo may use or distribute any of the information you supply in any way it believes appropriate without incurring any obligation to you.

Any references in this publication to non-Lenovo Web sites are provided for convenience only and do not in any manner serve as an endorsement of those Web sites. The materials at those Web sites are not part of the materials for this Lenovo product, and use of those Web sites is at your own risk. Any performance data contained herein was determined in a controlled environment. Therefore, the result obtained in other operating environments may vary significantly. Some measurements may have been made on development-level systems and there is no guarantee that these measurements will be the same on generally available systems. Furthermore, some measurements may have been estimated through extrapolation. Actual results may vary. Users of this document should verify the applicable data for their specific environment.

© Copyright Lenovo 2023. All rights reserved.

This document, LP1611, was created or updated on September 26, 2023.

Send us your comments in one of the following ways:

- Use the online Contact us review form found at:
  https://lenovopress.lenovo.com/LP1611
- Send your comments in an e-mail to:
  comments@lenovopress.com

This document is available online at https://lenovopress.lenovo.com/LP1611.

Trademarks

Lenovo and the Lenovo logo are trademarks or registered trademarks of Lenovo in the United States, other countries, or both. A current list of Lenovo trademarks is available on the Web at https://www.lenovo.com/us/en/legal/copytrade/.

The following terms are trademarks of Lenovo in the United States, other countries, or both:
Lenovo®
AnyBay®
Bootable Media Creator
Flex System
Lenovo Neptune®
Lenovo Services
ServerProven®
System x®
ThinkShield®
ThinkServer®
ThinkSystem®
UpdateXpress System Packs
XClarity®

The following terms are trademarks of other companies:

Intel® and Xeon® are trademarks of Intel Corporation or its subsidiaries.

Linux® is the trademark of Linus Torvalds in the U.S. and other countries.

ActiveX®, Dynamics, Microsoft®, PowerShell, Windows PowerShell®, Windows Server®, and Windows® are trademarks of Microsoft Corporation in the United States, other countries, or both.

SPECpower® is a trademark of the Standard Performance Evaluation Corporation (SPEC).

Other company, product, or service names may be trademarks or service marks of others.