Dell PowerEdge R760xa

Technical Guide

Regulatory Model: E102S Series
Regulatory Type: E102S001
June 2024
Rev. A05

DELL Technologies

Notes, cautions, and warnings

NOTE: A NOTE indicates important information that helps you make better use of your product.

CAUTION: A CAUTION indicates either potential damage to hardware or loss of data and tells you how to avoid the problem.

WARNING: A WARNING indicates a potential for property damage, personal injury, or death.

© 2024 Dell Inc. or its subsidiaries. All rights reserved. Dell Technologies, Dell, and other trademarks are trademarks of Dell Inc. or its subsidiaries. Other trademarks may be trademarks of their respective owners.

Contents

Chapter 1: System overview 5
Key workloads 5
New technologies 5

Chapter 2: System features and generational comparison 7

Chapter 3: Chassis views and features 10
Chassis views 11
Front view of the system 11
Rear view of the system 14
Inside view of the system 15
Quick Resource Locator 16

Chapter 4: Processor 17
Processor features 17
Supported processors 17

Chapter 5: Memory subsystem 19
Supported memory 19

Chapter 6: Storage 20
Storage controllers 20
Supported Drives 20
Internal storage configuration 21
External Storage 21

Chapter 7: Networking 22
Overview 22
OCP 3.0 support 22
Supported OCP cards 22
OCP NIC 3.0 vs. rack Network Daughter Card comparisons 23

Chapter 8: PCIe subsystem 24
PCIe risers 24

Chapter 9: Power, thermal, and acoustics 30
Power 30
Power Supply Units 31
Thermal 32
Thermal design 32
Acoustics 33
Acoustical configurations of R760xa 33
PowerEdge acoustical specifications 34

Chapter 10: Rack, rails, and cable management..... 42
Rails and cable management information..... 42

Chapter 11: Operating Systems and Virtualization..... 50
Supported Operating Systems..... 50

Chapter 12: Dell OpenManage Systems Management..... 51
Integrated Dell Remote Access Controller (iDRAC)..... 51
Systems Management software support matrix..... 52

Chapter 13: Appendix D: Services..... 53
Why attach service contracts..... 53
ProSupport Infrastructure Suite..... 53
Specialty Support Services..... 55
ProDeploy Infrastructure Suite..... 56
Supplemental Deployment Services..... 58
Unique Deployment Scenarios..... 59
DAY 2 - Automation Services with Ansible..... 60
Consulting Services..... 61
Resources..... 62

Chapter 14: Appendix A: Additional specifications..... 63
Chassis dimension..... 63
Chassis weight..... 64
NIC port specifications..... 64
Video specifications..... 64
USB ports specifications..... 65
PSU rating..... 65
Environmental specifications..... 66
Thermal air restrictions..... 67
Liquid cooling restrictions..... 68
Thermal restriction matrix..... 68

Chapter 15: Appendix A. Standards compliance..... 70

Chapter 16: Appendix C Additional resources..... 71

1

System overview

The Dell PowerEdge R760xa is Dell's latest two-socket, rack server that is designed to run complex workloads using highly scalable memory, I/O, and network options.

The system features:

- Up to two 4th Generation Intel Xeon® Scalable Processors with up to 56 cores
- Up to two 5th Generation Intel® Xeon® Scalable Processors with up to 64 cores
- Optional Direct Liquid Cooling for required CPU SKU configurations
- Up to 32 DDR5 DIMM slots
- Up to four double-wide or up to 12 single-wide GPU accelerators
- Two redundant AC or DC power supply units
- Up to 6 x 2.5-inch NVMe, 8 x 2.5-inch NVMe/SAS, 8 x 2.5-inch SAS with two universal slots, 6 x E3.S Gen5 NVMe drives
- PCI Express® (PCIe) 5.0 enabled expansion slots
- Network interface technologies to cover Network Interface Card (NIC)

Topics:

- Key workloads
- New technologies

Key workloads

- AI/ML/DL Training medium to large data sets
- HPC, VDI, performance graphics
- Digital Twins, Render farms, virtualization

New technologies

Table 1. New technologies

Technology	Detailed Description
5th Generation Intel® Xeon® Scalable Processors	Core count: Up to 64 core processor
	UPI speed: Up to 4 links per CPU, speed: 12.8 GT/s, 14.4 GT/s, 16 GT/s, 20 GT/s
	Maximum number of PCIe lanes per CPU: Integrated 80 PCIe 5.0 lanes @ 32 GT PCIe Gen5
	Maximum TDP: 350 W
5600 MT/s DDR5 Memory	Max 16 DIMMs per processor and 32 DIMMs per system
	Supports DDR5 ECC RDIMM
4th Generation Intel Xeon® Scalable Processors	Core count: Up to 56 core processor
	UPI speed: Up to four links per CPU, speed: 12.8 GT/s, 14.4 GT/s, 16 GT/s
	Maximum number of PCIe lanes per CPU: Integrated 80 PCIe 5.0 lanes @ 32 GT PCIe Gen5
	Maximum TDP: 350 W
4800 MT/s DDR5 Memory	Max 16 DIMM per processor and 32 DIMMs per system

Table 1. New technologies (continued)

Technology	Detailed Description
	Supports DDR5 ECC RDIMM
Flex I/O	2 x 1 GbE LOM card (optional) with BCM5720 LAN controller
	Rear I/O with: ● 1x Dedicated iDRAC Ethernet port ● 1 x USB 3.0 ● 1 x USB 2.0 ● 1 x VGA port (optional for Direct Liquid Cooling configuration)
	Serial Port Option with STD RIO board
	Optional OCP Mezz 3.0 (supported by x8 PCIe lanes)
	Front I/O with: ● 1 x USB 2.0 ● 1x iDRAC Direct (Micro-AB USB) port ● 1 x VGA port
CPLD 1-wire	Support payload data of Front PERC, Riser, BP, and Rear I/O to BOSS-N1 and iDRAC.
Dedicated PERC	Front Storage module PERC with Front PERC11 and PERC12
Power Supplies	86 mm dimension PSU
	Platinum 2400 W AC/HVDC
	Titanium 2800 W AC/HVDC
	Titanium 3200 W AC/HVDC

NOTE: HVDC stands for High-Voltage DC, with 336 V DC.

2

System features and generational comparison

The following table shows the comparison between the PowerEdge R760xa with the PowerEdge R750xa.

Table 2. Features comparison

Features	PowerEdge R760xa	PowerEdge R750xa
Processors	• Two 4th Gen Intel® Xeon® Scalable Processors • Two 5th Generation Intel® Xeon® Scalable Processors	Two 3rd Generation Intel Xeon Scalable processors
CPU interconnect	Intel Ultra Path Interconnect (UPI)	Intel Ultra Path Interconnect (UPI)
Memory	• 32 x DDR5 RDIMM • Up to 4800 MT/s (1 DPC) / 4400 MT/s (2 DPC) • Up to 5600 MT/s (1 DPC) / 4400 MT/s (2 DPC) *	• 32 x DDR4 RDIMM, LRDIMM • 16 x PMem (Intel Optane Persistent Memory 200 Series)
Storage Controllers	• PERC 11: H755, H755N, H355 • PERC 12: H965i, H965e • HBA : HBA355i, HBA355e, HBA465i, HBA465e • BOSS-N1 • Software RAID: S160	Adapters: HBA355I, HBA355E, H345, H355, H745, H755, H755N, H840 BOSS S2 BOSS S1 Software RAID: S150
Drive Bays	Front bays: • Up to 8 x 2.5-inch NVMe or SAS/SATA SSD max 122.88 TB • Up to 6 x E3.S Gen5 NVMe max 46.08 TB	Front bays: • Up to 8 x 2.5 inches SAS/SATA SSD or NVMe
Power Supplies	• AC (Platinum): 2400 W • AC (Titanium): 2800 W • AC (Titanium): 3200 W • DC (Mixed Mode): 2400 W, 2800 W, 3200 W	• AC (Platinum): 1400 W, 2400 W • AC (Titanium): 1800 W, 2800 W • DC (Mixed Mode): 1400 W, 1800 W, 2400 W, 2800 W
Cooling Options	• Air Cooling • Optional Direct Liquid Cooling (DLC) for CPUs only	• Air Cooling
	NOTE: DLC is a rack solution and requires rack manifolds and a cooling distribution unit (CDU) to operate.	**NOTE:** DLC is a rack solution and requires rack manifolds and a cooling distribution unit (CDU) to operate.
Fans	Standard (STD) fan	Up to eight hot plug fans
	Up to six hot swap fans	
Dimension	Height: 86.8 mm (3.41 inches)	Height: 86.8 mm (3.41 inches)
	Width: 482 mm (18.97 inches)	Width: 482.0 mm (18.97 inches)
	Depth: 946.73 mm (37.27 inches) with bezel	Depth: 908.64 mm (35.77 inches) with bezel

Table 2. Features comparison (continued)

Features	PowerEdge R760xa	PowerEdge R750xa
	932.89 mm (36.73 inches) without bezel	894.8 mm (35.22 inches) without bezel
Form Factor	2U rack server	2U rack server
Embedded Management	• iDRAC9 • iDRAC Direct • iDRAC RESTful with Redfish • iDRAC Service Manual • Quick Sync 2 wireless module	• iDRAC9 • iDRAC Direct • iDRAC Service Module • Quick Sync 2 wireless module
Bezel	Optional LCD bezel or security bezel	Optional LCD bezel or security bezel
OpenManage Software	• CloudIQ for PowerEdge plug-in • OpenManage Enterprise • OpenManage Enterprise Integration for VMware vCenter • OpenManage Integration for Microsoft System Center • OpenManage Integration with Windows Admin Center • OpenManage Power Manager plug-in • OpenManage Service plug-in • OpenManage Update Manager plug-in	• OpenManage Enterprise • OpenManage Power Center
Mobility	OpenManage Mobile	OpenManage Mobile
Integrations and Connections	OpenManage Integrations • BMC TrueSight • Microsoft System Center • OpenManage Integration with ServiceNow • Red Hat Ansible Modules • Terraform Providers • VMware vCenter and vRealize Operations Manager	OpenManage Integrations • BMC TrueSight • Microsoft System Center • Red Hat Ansible Modules • VMware vCenter • IBM Tivoli Netcool/ OMNIbus • IBM Tivoli Network Manager IP Edition • Micro Focus Operations Manager • Nagios Core • Nagios XI
Security	• Cryptographically signed firmware • Secure Boot • Secure Erase • Silicon Root of Trust • System Lockdown (requires iDRAC9 Enterprise or Datacenter) • TPM 2.0 FIPS, CC-TCG certified, TPM 2.0 China NationZ • Secured Component Verification (Hardware integrity check) • Data at Rest Encryption (SEDs with local or external key mgmt)	• Cryptographically signed firmware • Secure Boot • Secure Erase • Silicon Root of Trust • System Lockdown (requires iDRAC9 Enterprise or Datacenter) • TPM 1.2/2.0 (optional)
Embedded NIC	2 x 1 GbE LOM (optional)	2 x 10 GbE
Networking Options	OCP x8 (optional) Mezz 3.0 **NOTE:** The system allows either LOM card or an OCP card or both to be installed in the system.	-
GPU Options	Up to 4 x double wide 400 W, or 12 x single wide 75 W accelerators	Up to 4 x double wide 300 W or 8 x single wide 150 W accelerators
Ports	Front Ports • 1 x USB 2.0 Rear Ports • 1 x USB 2.0	Front Ports • 1 x USB 2.0 Rear Ports • 1 x USB 2.0

Table 2. Features comparison (continued)

Features	PowerEdge R760xa		PowerEdge R750xa	
	• 1 x iDRAC Direct (Micro-AB USB) port • 1 x VGA	• 1 x iDRAC Direct Ethernet port • 1 x USB 3.0 • 1 x Serial port (optional) • 1 x VGA	• 1 x iDRAC Direct (Micro-AB USB) port • 1 x VGA	• 1 x USB 3.0
	Internal Port (optional): 1 x USB 3.0		Internal Port (optional): 1 x USB 3.0	
PCIe	Up to 4 x PCIe SW Gen5 slots (Rear)+ Up to 8 x PCIe SW Gen5 slots (Front), Or Up to 4 x PCIe DW Gen5 slots (Front)		8 x PCIe Gen 3 slots (4 x 8) 8 x Gen 3 slots (4 x 16)	
Operating System and Hypervisors	• Canonical Ubuntu Server LTS • Windows Server with Hyper-V • Red Hat Enterprise Linux • SUSE Linux Enterprise Server • VMware ESXi For specifications and interoperability details, see Dell Enterprise Operating Systems on Servers, Storage, and Networking page at Dell.com/OSsupport.		• Canonical Ubuntu Server LTS • Citrix Hypervisor • Windows Server LTSC with Hyper-V • Red Hat Enterprise Linux • SUSE Linux Enterprise Server • VMware ESXi For specifications and interoperability details, see Dell Enterprise Operating Systems on Servers, Storage, and Networking page at Dell.com/OSsupport.	

NOTE: * Applicable for 5th Generation Intel® Xeon® Scalable Processors.

3

Chassis views and features

Topics:

- Chassis views

Chassis views

Front view of the system



Figure 1. Front view of 6 x 2.5-inch NVME drives system



Figure 2. Front view of 8 x 2.5-inch NVME/SAS4 drives system



Figure 3. Front view of 6 x E3.S drives system

Rear view of the system

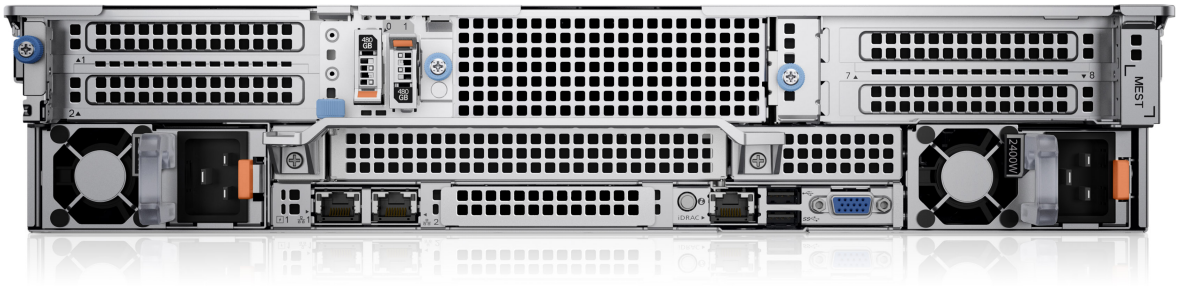

Figure 4. Rear view of the system

Inside view of the system

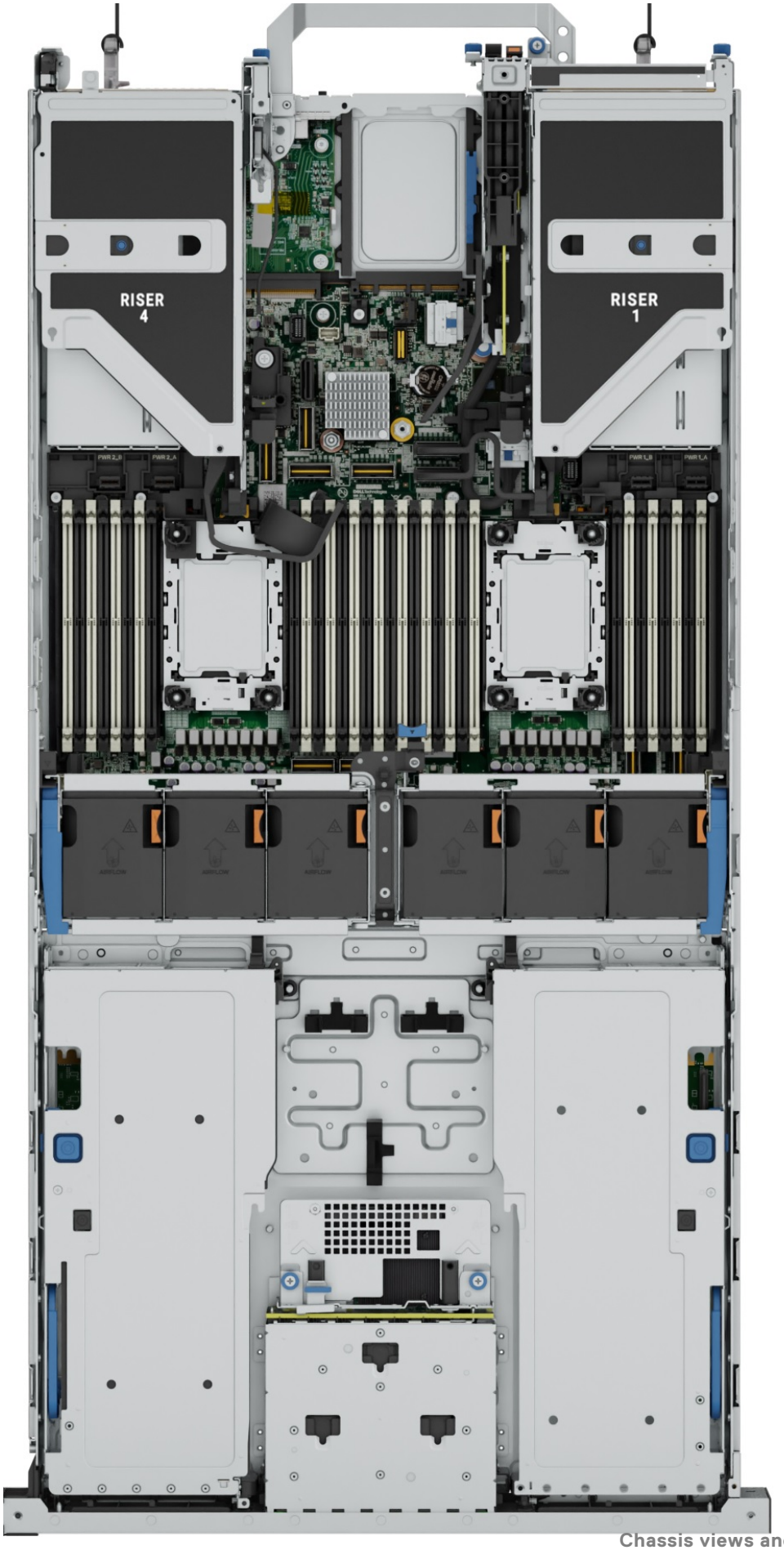

Figure 5. Inside view of the system

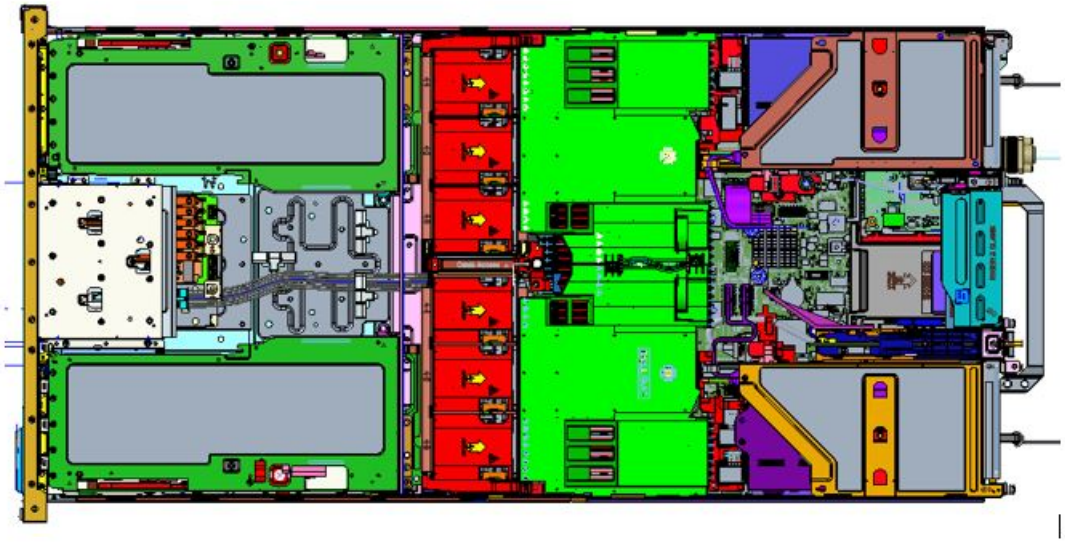

Figure 6. Inside the system 6 x E3.S

Quick Resource Locator

The QRL on everything (SILs, GSG, Owner's Manual except on the EST) is a generic QRL for R760xa that leads to a webpage for that product. That webpage has links for things like setup and service videos, iDRAC manual, and other things that apply to the platform. The QRL on the EST is unique and specific to that service tag and will contain the Service Tag number and the iDRAC password. The label and the QRL code within it are printed on demand at the L10 factories. This QRL links to a webpage that shows the exact configuration as built for that customer, and the specific warranty purchased. It is one click away from the same content of generic information that applies to R760xa that is available in the other QRLs.



Figure 7. Quick Resource Locator for PowerEdge R760xa system

4

Processor



Topics:

- Processor features

Processor features

The Intel 4th and 5th Generation Xeon® Scalable Processors stack is the next generation data center processor offering with significant performance increases, integrated acceleration, and next generation memory and I/O. Sapphire Rapids and Emerald Rapids accelerate customer usages with unique workload optimizations.

The following lists the features and functions that are in the upcoming 4th Generation Intel® Xeon Scalable Processor offering:

- Faster UPI with up to four Intel Ultra Path Interconnect (Intel UPI) at up to 16 GT/s, increasing multisocket bandwidth
- More, faster I/O with PCI Express 5 and up to 80 lanes (per socket)
- Enhanced Memory Performance with DDR5 support and memory speed up to 4800 MT/s in one DIMM per channel (1DPC) and 4400 MT/s in two DIMM per channel (2DPC)
- New built-in accelerators for data analytics, networking, storage, crypto, and data compression

The following lists the features and functions that are in the 5th Generation Intel® Xeon® Scalable Processor offering:

- Increased core counts with up to 64 cores
- Enhanced memory performance with DDR5 and memory speed up to 5600 MT/s in one DIMM per channel (1DPC) and up to 4400 MT/s in two DIMM per channel (2DPC), 24 Gb and 16 Gb DRAM
- Faster UPI with up to four Intel Ultra Path Interconnect (Intel® UPI) at up to 20 GT/s, increasing multi-socket bandwidth
- Enhanced security for virtualized environments with Intel Trust Domain Extensions (Intel® TDX) for confidential computing

Supported processors

The following tables show the Intel Sapphire Rapids (4th Generation Intel Xeon® Scalable Processors) and Intel Emerald Rapids (5th Generation Intel® Xeon® Scalable Processors) SKUs that are supported on the R760xa.

Table 3. 4th Generation Intel Xeon® Scalable Processors supported in R760xa

Processor	Core count	Clock Speed (GHz)	Cache (M)	UPI (GT/s)	Cores	Threads	Turbo	Memory Speed (MT/s)	Memory Capacity	TDP
8480+	XCC	2	105	16	56	112	Turbo	4800	4 TB	350 W
8470Q	XCC	2.1	105	16	52	104	Turbo	4800	4 TB	350 W
8470	XCC	2	105	16	52	104	Turbo	4800	4 TB	350 W
8468	XCC	2.1	105	16	48	96	Turbo	4800	4 TB	350 W
8460Y+	XCC	2	105	16	40	80	Turbo	4800	4 TB	300 W
8458P	XCC	2.7	83	16	44	88	Turbo	4800	4 TB	350 W
8452Y	XCC	2	68	16	36	72	Turbo	4800	4 TB	300 W

Table 3. 4th Generation Intel Xeon® Scalable Processors supported in R760xa (continued)

Processor	Core count	Clock Speed (GHz)	Cache (M)	UPI (GT/s)	Cores	Threads	Turbo	Memory Speed (MT/s)	Memory Capacity	TDP
8462Y+	MCC	2.8	60	16	32	64	Turbo	4800	4 TB	300 W
6458Q	MCC	3.1	60	16	32	64	Turbo	4800	4 TB	350 W
6448Y	MCC	2.2	60	16	32	64	Turbo	4800	4 TB	225 W
6442Y	MCC	2.6	60	16	24	48	Turbo	4800	4 TB	225 W
6438Y+	MCC	2	60	16	32	64	Turbo	4800	4 TB	205 W
6438M	MCC	2.2	60	16	32	64	Turbo	4800	4 TB	205 W
6426Y	MCC	2.6	38	16	16	32	Turbo	4800	4 TB	185 W
5420+	MCC	2	53	16	28	56	Turbo	4400	4 TB	205 W
5418Y	MCC	2	45	16	24	48	Turbo	4400	4 TB	185 W
5416S	MCC	2	30	16	16	32	Turbo	4400	4 TB	150 W
4416+	MCC	2	38	16	20	40	Turbo	4000	4 TB	165 W
4410Y	MCC	2	30	16	12	24	Turbo	4000	4 TB	150 W

Table 4. 5th Generation Intel® Xeon® Scalable Processors supported in R760xa

Processor	Core count	Clock Speed (GHz)	Cache (M)	UPI (GT/s)	Cores	Threads	Turbo	Memory Speed (MT/s)	Memory Capacity	TDP
8592+	XCC	1.9	320	20	64	128	Turbo	5600	4 TB	350 W
8580	XCC	2.0	300	20	60	120	Turbo	5600	4 TB	350 W
8568Y+	XCC	2.3	300	20	48	96	Turbo	5600	4 TB	350 W
8562Y+	MCC	2.8	60	20	32	64	Turbo	5600	4 TB	300 W
6548Y+	MCC	2.5	60	20	32	64	Turbo	5200	4 TB	250 W
6542Y	MCC	2.9	60	20	24	48	Turbo	5200	4 TB	250 W
6534	MCC	3.9	22.5	20	8	16	Turbo	4800	4 TB	195 W
6526Y	MCC	2.8	37.5	20	16	32	Turbo	5200	4 TB	195 W
4514Y	MCC	2.0	30	16	16	32	Turbo	4400	4 TB	150 W
4510	EE LCC Mainline	2.4	30	16	12	24	Turbo	4400	4 TB	150 W
4509Y	EE LCC Mainline	2.6	23	16	8	16	Turbo	4400	4 TB	125 W

5

Memory subsystem

Topics:

- Supported memory

Supported memory

Table 5. Memory technology comparison

Feature	PowerEdge R760xa (DDR5)
DIMM type	RDIMM
Transfer speed	4800 MT/s (1DPC), 4400 MT/s (2DPC)
	5600 MT/s (1DPC), 4400 MT/s (2DPC)*
Voltage	1.1 V

NOTE: *Applicable for 5th Generation Intel® Xeon® Scalable Processors.

Table 6. Supported memory matrix

DIMM type	Rank	Capacity	DIMM rated voltage and speed	Operating Speed	
				1 DIMM per channel (DPC)	2 DIMMs per channel (DPC)
RDIMM	1 R	16 GB	DDR5 (1.1 V), 4800 MT/s	4800 MT/s	4400 MT/s
	2 R	32 GB, 64 GB	DDR5 (1.1 V), 4800 MT/s	4800 MT/s	4400 MT/s
	4 R	128 GB	DDR5 (1.1 V), 4800 MT/s	4800 MT/s	4400 MT/s
	8 R	256 GB	DDR5 (1.1 V), 4800 MT/s	4800 MT/s	4400 MT/s
	1 R	16 GB	DDR5 (1.1 V), 5600 MT/s	5600 MT/s	4400 MT/s
	2 R	32 GB, 64 GB, 96 GB	DDR5 (1.1 V), 5600 MT/s	5600 MT/s	4400 MT/s
	4 R	128 GB	DDR5 (1.1 V), 5600 MT/s	5600 MT/s	4400 MT/s

NOTE: 5600 MT/s RDIMMs are applicable for 5th Generation Intel® Xeon® Scalable Processors.

NOTE: The processor may reduce the performance of the rated DIMM speed.

6

Storage

Topics:

- Storage controllers
- Supported Drives
- Internal storage configuration
- External Storage

Storage controllers

Dell RAID controller options offer performance improvements, including the fPERC solution. fPERC provides a base RAID HW controller without consuming a PCIe slot by using a small form factor and high-density connector to the base planar.

16G PERC Controller offerings are a heavy leverage of 15G PERC family. The Value and Value Performance levels carry over to 16G from 15G. New to 16G is the Avenger-based Premium Performance tier offering. This high-end offering drives IOPs performance and enhanced SSD performance.

Table 7. PERC Series controller offerings

Performance Level	Controller and Description
Entry	S160
Value	PERC H355
Value Performance	PERC H755, PERC H755N
Premium Performance	H965i Avenger 1 Memory: 8GB DDR4 NV cache 72-bit memory 2133 MHz Low profile form factors Dual A15 1.2 GHz CPU X8PCIe 3.0, x8 12Gb SAS

NOTE: For more information on the features of the Dell PowerEdge RAID controllers (PERC), Software RAID controllers, or BOSS card, and on deploying the cards, see the storage controller documentation at Storage Controller Manuals.

Supported Drives

The table shown below lists the internal drives supported by the R760xa. Refer to Agile for the latest SDL.

Table 8. Supported Drives

Form Factor	Type	Speed	Rotational Speed	Capacities
2.5 inches	SATA SSD	6 GB	SSD	480 GB , 960 GB, 1.92 TB, 3.84 TB, 7.68 TB
2.5 inches	SAS SSD	12 GB	SSD	960 GB, 1.92 TB, 3.84 TB, 7.68 TB

Table 8. Supported Drives (continued)

Form Factor	Type	Speed	Rotational Speed	Capacities
2.5 inches	SAS SSD	24 GB	SSD	800 GB, 960 GB, 1.6 TB, 1.92 TB, 3.2 TB, 3.84 TB, 7.68 TB, 12.8 TB, 15.36 TB

Internal storage configuration

R760xa available internal storage configurations:

- 6 x 2.5-inch NVMe direct attached (S160)
- 8 x 2.5-inch NVMe RAID
- 8 x 2.5-inch SAS/SATA
- 8 x 2.5-inch SAS/SATA, two universal slots (SAS/SATA HWRAID + NVMe Direct)
- 6 x E3.S Gen5 NVMe direct attached (S160)

External Storage

The R760xa support the external storage device types listed in the table below.

Table 9. Support External Storage Devices

Device Type	Description
External Tape	Supports connection to external USB tape products
NAS/IDM appliance software	Supports NAS software stack
JBOD	Supports connection to 12 Gb MD-series JBODs

7

Networking

Topics:

- Overview
- OCP 3.0 support

Overview

PowerEdge offers a wide variety of options to get information moving to and from our servers. Industry best technologies are chosen, and systems management features are added by our partners to firmware to tie in with iDRAC. These adapters are rigorously validated for worry-free, fully supported use in Dell servers.

OCP 3.0 support

Table 10. OCP 3.0 feature list

Feature	OCP 3.0
Form factor	SFF
PCIe Gen	Gen4
Max PCIe width	x8, x16 (with OCP cable)
Max no. of ports	4
Port type	BT/SFP/SFP+/SFP28/QSFP56
Max port speed	100 GbE
NC-SI	Yes
WoL	Yes

Supported OCP cards

Table 11. Supported OCP cards

Form factor	Vendor	Port type	Port speed	Port count
OCP 3.0	Broadcom	QSFP56	100 GbE	2
	Mellanox	QSFP56	100 GbE	2
	Broadcom	SFP28	25 GbE	4
	Mellanox	SFP28	25 GbE	2
	Intel	SFP28	25 GbE	2
	Broadcom	SFP28	25 GbE	2
	Intel	SFP28	25 GbE	2
	Broadcom	BT	10 GbE	2

Table 11. Supported OCP cards (continued)

Form factor	Vendor	Port type	Port speed	Port count
	Broadcom	BT	10 GbE	4
	Intel	BT	10 GbE	4
	Intel	BT	10 GbE	2
	Intel	BT	10 GbE	4
	Broadcom	BT	1 GbE	4
	Intel	BT	1 GbE	4

OCP NIC 3.0 vs. rack Network Daughter Card comparisons

Table 12. OCP 3.0, 2.0, and rNDC NIC comparison

Form Factor	Dell rNDC	OCP 2.0 (LOM Mezz)	OCP 3.0	Notes
PCIe Gen	Gen 3	Gen 3	Gen 4	Supported OCP3's are SFF (small form factor).
Max PCIe Lanes	x8	Up to x16	Up to x8 on system board Up to x16 with additional OCP cable	See server slot priority matrix.
Shared LOM	Yes	Yes	Yes	This is iDRAC port redirect.
Aux Power	Yes	Yes	Yes	Used for Shared LOM

8

PCIe subsystem

Topics:

- PCIe risers

PCIe risers

Shown below are the riser offerings for the R760xa platform.

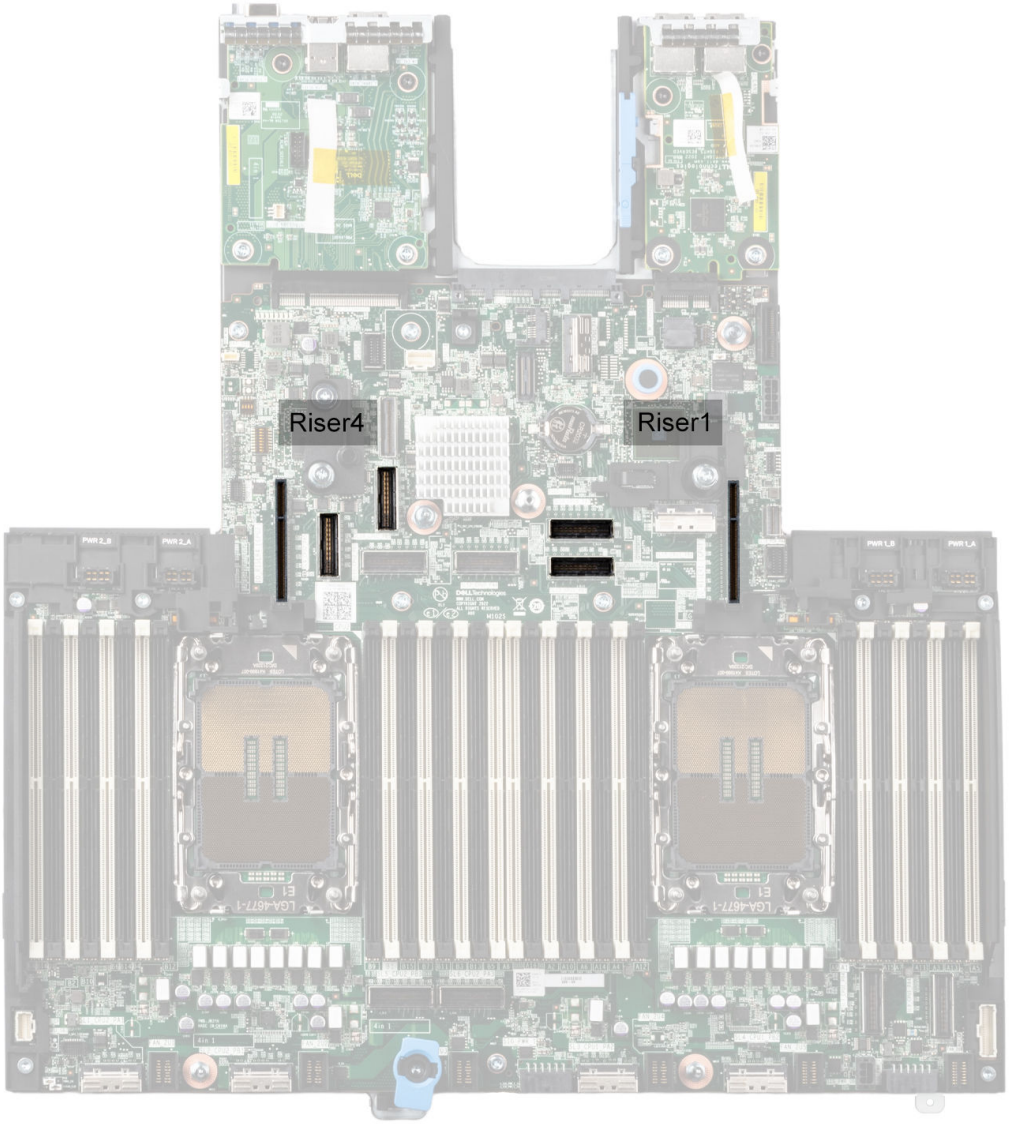

Figure 8. Riser connector location on system board

1. Riser 1
2. Riser 4

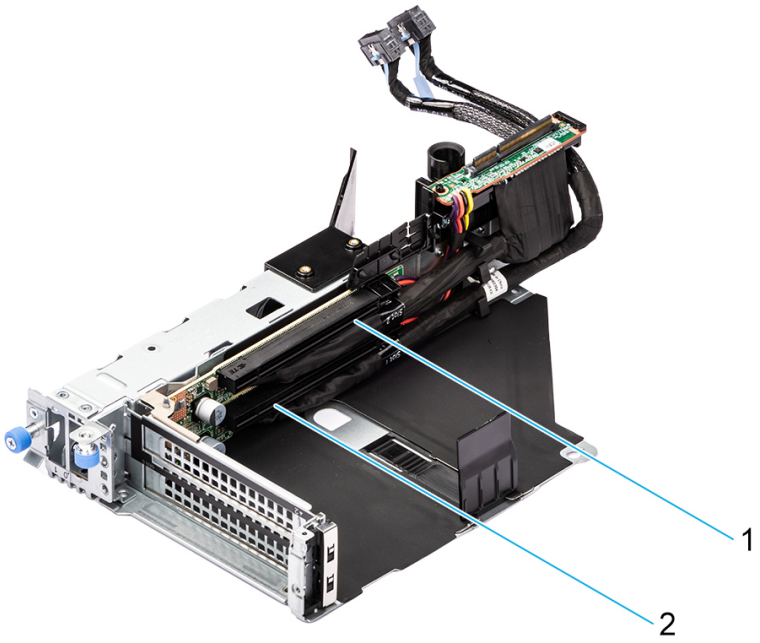

Figure 9. Riser R1V

1. Slot 2
2. Slot 1

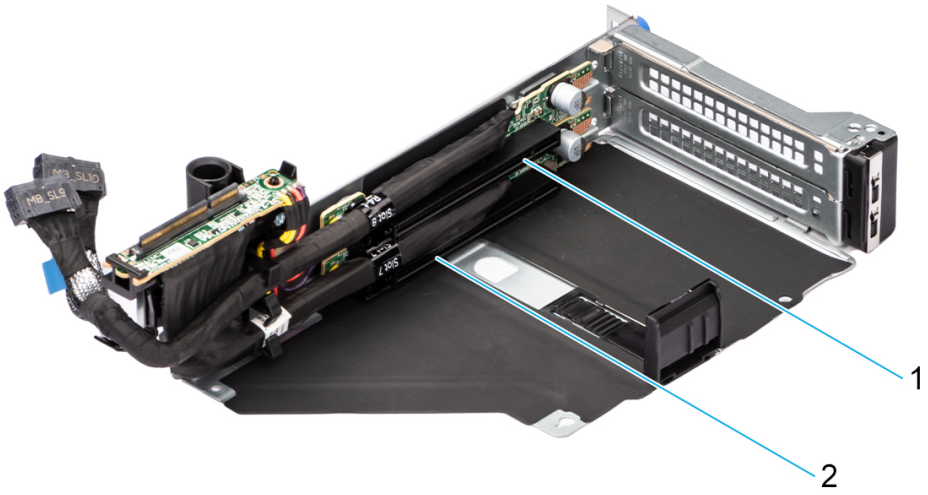

Figure 10. Riser R4T

1. Slot 8
2. Slot 7

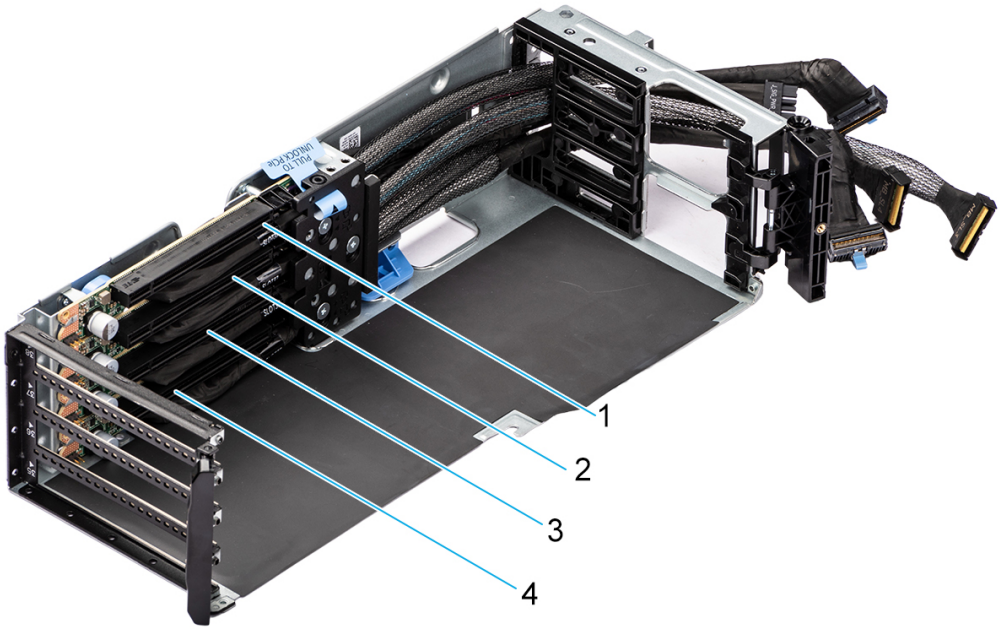

Figure 11. GPU Right Riser RF1B

1. Slot 38
2. Slot 37
3. Slot 36
4. Slot 35

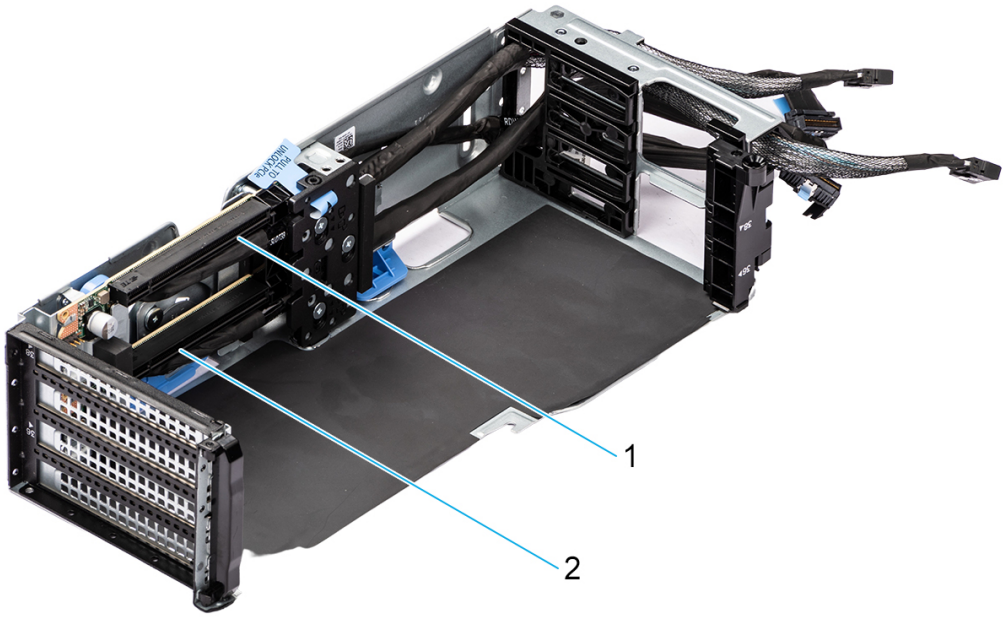

Figure 12. GPU Right Riser RF1A

1. Slot 38
2. Slot 36

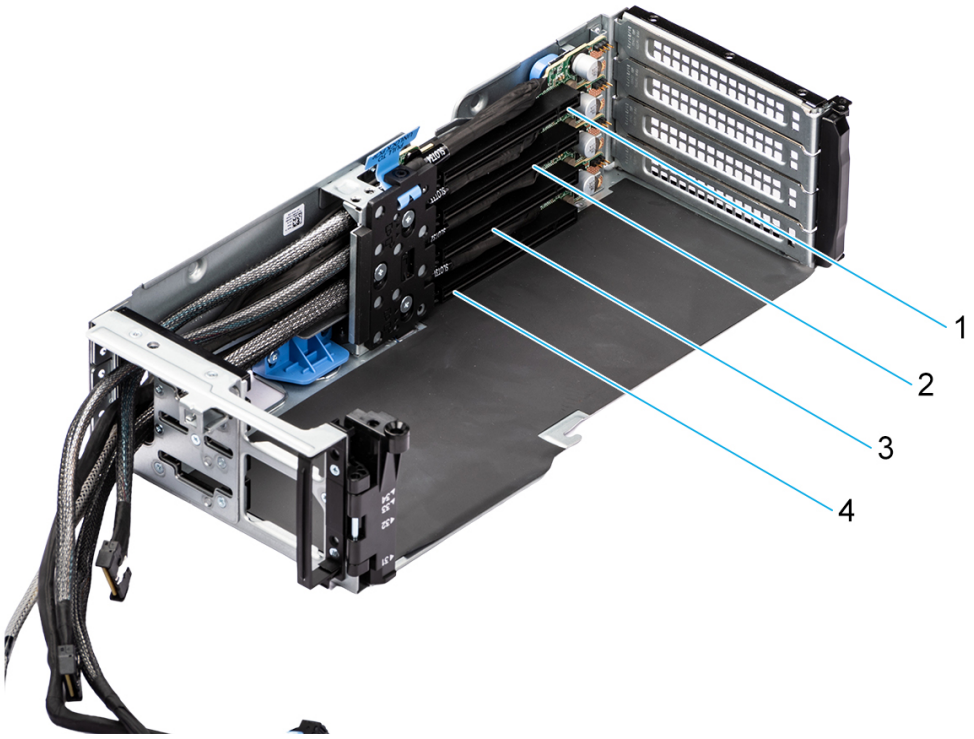

Figure 13. GPU Left Riser RF2B

1. Slot 34
2. Slot 33
3. Slot 32
4. Slot 31

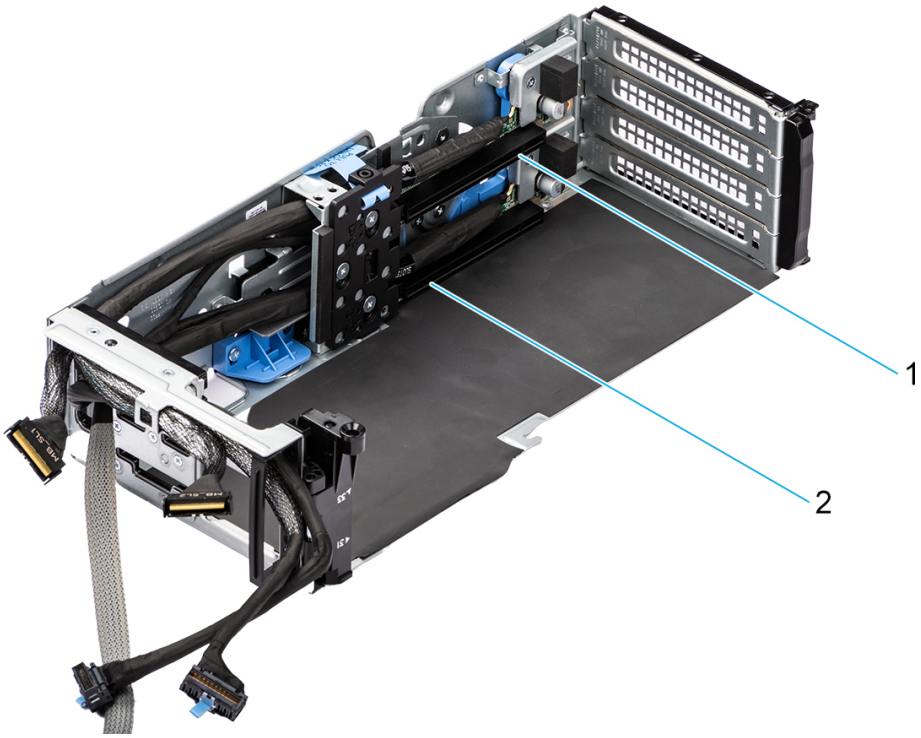

Figure 14. GPU Left Riser RF2A

1. Slot 33
2. Slot 31

Table 13. Riser configurations

Configurations	Expansion card risers	PCIe Slots	Controlling processor	Height	Length	Slot width
Config 0-1. Without GPU bridge 4 x16 Rear FH + 4 x16 Front FH DW	R1V	1 and 2	Processor 1	Full height	Half length	x16 + x16
	RF1A	36 and 38	Processor 1	Full Height, double width	Full length	x16 + x16
	R4T	7 and 8	Processor 2	Full height	Half length	x16 + x16
	RF2A	31 and 33	Processor 2	Full Height, double width	Full length	x16 + x16
Config 0-1. With GPU bridge 4 x16 Rear FH + 4 x16 Front FH DW	R1V	1 and 2	Processor 1	Full height	Half length	x16 + x16
	RF1A	36 and 38	Processor 1	Full Height, double width	Full length	x16 + x16
	R4T	7 and 8	Processor 2	Full height	Half length	x16 + x16
	RF2A	31 and 33	Processor 2	Full Height, double width	Full length	x16 + x16
Config1. 4 x16 Rear FH + 8 x8 Front FH SW	R1V	1 and 2	Processor 1	Full height	Half length	x16 + x16
	R4T	7 and 8	Processor 2	Full height	Half length	x16 + x16
	RF1B	35, 36, 37 and 38	Processor 1	Full Height, single width	Full length	x8 + x8 + x8 + x8
	RF2B	31, 32, 33 and 34	Processor 2	Full Height, single width	Full length	x8 + x8 + x8 + x8

9

Power, thermal, and acoustics

PowerEdge servers have an extensive collection of sensors that automatically track thermal activity, which helps to regulate temperature by reducing server noise and power consumption. The table below lists the tools and technologies Dell offers to lower power consumption and increase energy efficiency.

Topics:

- Power
- Thermal
- Acoustics

Power

Table 14. Power tools and technologies

Feature	Description
Power Supply Units(PSU) portfolio	Dell's PSU portfolio includes intelligent features such as dynamically optimizing efficiency while maintaining availability and redundancy. Find additional information in the Power supply units section.
Tools for right sizing	Enterprise Infrastructure Planning Tool (EIPT) is a tool that can help you determine the most efficient configuration possible. With Dell's EIPT, you can calculate the power consumption of your hardware, power infrastructure, and storage at a given workload. Learn more at Dell EIPT.
Industry Compliance	Dell's servers are compliant with all relevant industry certifications and guide lines, including 80 PLUS, Climate Savers and ENERGY STAR.
Power monitoring accuracy	PSU power monitoring improvements include: ● Dell's power monitoring accuracy is currently 1%, whereas the industry standard is 5% ● More accurate reporting of power ● Better performance under a power cap
Power capping	Use Dell's systems management to set the power cap limit for your systems to limit the output of a PSU and reduce system power consumption. Dell is the first hardware vendor to leverage Intel Node Manager for circuit-breaker fast capping.
Systems Management	iDRAC Enterprise and Datacenter provides server-level management that monitors, reports and controls power consumption at the processor, memory and system level. Dell OpenManage Power Center delivers group power management at the rack, row, and data center level for servers, power distribution units, and uninterruptible power supplies.
Active power management	Intel Node Manager is an embedded technology that provides individual server-level power reporting and power limiting functionality. Dell offers a complete power management solution comprised of Intel Node Manager accessed through Dell iDRAC9 Datacenter and OpenManage Power Center that allows policy-based management of power and thermal at the individual server, rack, and data center level. Hot spare reduces power consumption of redundant power supplies. Thermal control off a speed optimizes the thermal settings for your environment to reduce fan consumption and lower system power consumption. Idle power enables Dell servers to run as efficiently when idle as when at full workload.
Rack infrastructure	Dell offers some of the industry's highest-efficiency power infrastructure solutions, including:

Table 14. Power tools and technologies (continued)

Feature	Description
	• Power distribution units (PDUs) • Uninterruptible power supplies (UPSs) • Energy Smart containment rack enclosures Find additional information at: Power and Cooling.

Power Supply Units

Energy Smart power supplies have intelligent features, such as the ability to dynamically optimize efficiency while maintaining availability and redundancy. Also featured are enhanced power-consumption reduction technologies, such as high-efficiency power conversion and advanced thermal-management techniques, and embedded power-management features, including high-accuracy power monitoring. The table below shows the power supply unit options that are available for the R760xa.

Table 15. Power Supply Unit Options

Wattage	Frequency	Voltage/Current	Class	Heat dissipation
2400 W mixed mode	50/60 Hz	100–240 Vac/ 16—13.5 A	Platinum	9000 BTU/hr
	N/A	240 Vdc/11.2 A	N/A	9000 BTU/hr
2800 W mixed mode	50/60 Hz	200–240 Vac/15.6 A	Titanium	10,500 BTU/hr
	N/A	240 Vdc/13.6 A	N/A	10,500 BTU/hr
3200 W mixed mode	50/60 Hz	277 Vac/13.0 A	Titanium	12,000 BTU/hr
	N/A	336 Vdc/11.5 A	N/A	12,000 BTU/hr

NOTE: If a system with AC 2400 W PSUs operates at low line 100-120 Vac, and then the power rating per PSU is degraded to 1400 W.

Table 16. PSU power cords

Form factor	Output	Power cord
Redundant 86 mm	2400 W mixed mode	C19
	2800 W mixed mode	C21
	3200 W mixed mode	APP 2006G1



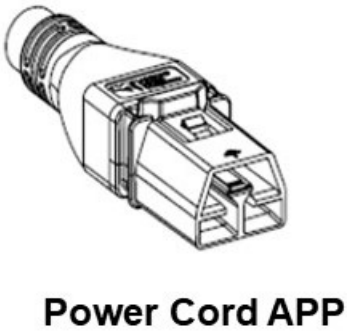

Figure 15. PSU power cords

NOTE: C19 power cord combined with C20 to C21 jumper power cord can be used to adapt 2800 W PSU.

Thermal

PowerEdge servers have an extensive collection of sensors that automatically track thermal activity, which helps regulate temperature thereby reducing server noise and power consumption.

Thermal design

Thermal management of the platform helps deliver high performance with the right amount of cooling to components, while maintaining the lowest fan speeds possible. This is done across a wide range of ambient temperatures from 10°C to 35°C (50°F to 95°F) and to extended ambient temperature ranges.

1. Reliability	• Component hardware reliability remains the top thermal priority. • System thermal architectures and thermal control algorithms are designed to ensure there are no tradeoffs in system level hardware life.
2. Performance	• Performance and uptime are maximized through the development of cooling solutions that meet the needs of even the densest of hardware configurations.
3. Efficiency	• 16 G servers are designed with an efficient thermal solution to minimize power and airflow consumption, and/or acoustics for acoustical deployments. • Dell's advanced thermal control algorithms enable minimization of system fans speeds while meeting the above Reliability and Performance tenets.
4. Management	• System management settings are provided such that customers have options to customize for their unique hardware, environments, and/or workloads.
5. Forward Compatibility	• Forward compatibility means that thermal controls and thermal architecture solutions are robust to scale to new components that historically would have otherwise required firmware updates to ensure proper cooling. • The frequency of required firmware updates is thus reduced.

Figure 16. Thermal design characteristics

The thermal design of the PowerEdge R760xa reflects the following:

- Optimized thermal design: The system layout is architected for optimum thermal design.
- System component placement and layout are designed to provide maximum airflow coverage to critical components with minimum expense of fan power.

- Comprehensive thermal management: The thermal control system regulates the fan speed based on several different responses from all system-component temperature sensors, and inventory for system configurations. Temperature monitoring includes components such as processors, DIMMs, chipset, the inlet air ambient, hard disk drives, and OCP.
- Open and closed loop thermal fan speed control: Open loop thermal control uses system configuration to determine fan speed based on inlet air ambient temperature. Closed loop thermal control method uses feedback temperatures to dynamically determine proper fan speeds.
- User-configurable settings: With the understanding and realization that every customer has unique set of circumstances or expectations from the system, in this generation of servers, we have introduced limited user- configurable settings residing in the iDRAC BIOS setup screen. For more information, see the Dell PowerEdge R760xa Installation and Service Manual at PowerEdge Manuals and "Advanced Thermal Control: Optimizing across Environments and Power Goals" on Dell.com.
- Cooling redundancy: The R760xa allows N+1 fan redundancy, allowing continuous operation with one fan failure in the system.
- Environmental Specifications: The optimized thermal management makes the R760xa reliable under a wide range of operating environments.

Acoustics

Acoustical configurations of R760xa

Dell PowerEdge R760xa is a rack server appropriate for attended data center environment. However, lower acoustical output is attainable with proper hardware or software configurations.

Table 17. Configurations tested for acoustical experience

Configuration	Quietest Configuration	Configuration A (HPC, AI Training, and Analytics)
CPU TDP	165 W	225 W
CPU Quantity	2	2
RDIMM Memory	16 Gb DDR5	256 Gb DDR5
Memory Quantity	2	32
Backplane Type	8x2.5 NVMe BP	8x2.5 NVMe BP
Flash Drives	PCIe SSD 1.92 TB	PCIe SSD 1.92 TB
Flash Quantity	6	6
PSU Type	2400 W	2800 W
PSU Quantity	2	2
PCI 1	x	x
PCI 2	2-port 10 Gb	1-port 200 Gb
PCI 7	x	x
PCI 8	x	1-port 200 Gb
PCI 31	NVIDIA A30 165 W	NVIDIA A100 300 W
PCI 33	x	NVIDIA A100 300 W
PCI 36	x	NVIDIA A100 300 W
PCI 38	x	NVIDIA A100 300 W

Table 18. Acoustical experience of R760xa configurations

Configuration	Quietest Configuration	Configuration A (HPC, AI Training, and Analytics)
Acoustical Performance: Idle/ Operating @ 25°C Ambient		

Table 18. Acoustical experience of R760xa configurations (continued)

Configuration		Quietest Configuration	Configuration A (HPC, AI Training, and Analytics)
$L_{wA,m}$ (B)	Idle[4] / Operating[5]	7.3	7.3
	Customer usage operating[6]	7.5	8.0
K_v (B)	Idle[4] / Operating[5]	0.4	0.4
	Customer usage operating[6]	0.4	0.4
$L_{pA,m}$ (dB)	Idle[4] / Operating[5]	57	57
	Customer usage operating[6]	58	66
Prominent discrete tones[3]		Prominence ratio < 17 dB	No audible tones
Acoustical Performance: Idle @ 28°C Ambient			
$L_{wA,m}$[1] (B)		7.8	7.6
K_v (B)		0.4	0.4
$L_{pA,m}$[2] (dB)		62	61
Acoustical Performance: Max. loading @ 35°C Ambient			
$L_{wA,m}$[1] (B)		8.5	9.0
K_v (B)		0.4	0.4
$L_{pA,m}$[2](dB)		69	73

[1]LwA,m: The declared mean A-weighted sound power level (LwA) is calculated per section 5.2 of ISO 9296 with data collected using the methods described in ISO 7779 (2010). Engineering data presented here may not be fully compliant with ISO 7779 declaration requirements.

[2]LpA,m: The declared mean A-weighted emission sound pressure level is at the bystander position per section 5.3 of ISO 9296 and measured using methods described in ISO 7779. The system is placed in a 24U rack enclosure, 25 cm above a reflective floor. Engineering data presented here may not be fully compliant with ISO 7779 declaration requirements.

[3]Prominent discrete tones: Criteria of Annex D of ECMA-74 and the Prominence Ratio method of ECMA-418 are followed to determine if discrete tones are prominent and to report them, if so.

[4]Idle mode: Idle mode is the steady-state condition in which the server is energized but not operating any intended function.

[5]Operating mode: Operating mode is represented by the maximum of the steady state acoustical output at 50% of CPU TDP or active storage drives for the respective sections of Annex C of ECMA-74.

[6] Customer Usage Operating mode: The operating mode is represented by the maximum of the steady state acoustical output at 100% GPU, 20% CPU Load, 20% IOPs load as the components showed in the above configurations.

PowerEdge acoustical specifications

For more information about acoustical specifications, see ENG0019663. (See the category definitions.)

Dell typically categorizes servers in five categories of acoustically acceptable usage:

- Category 1: Table-top in Office Environment
- Category 2: Floor-standing in Office Environment
- Category 3: General Use Space
- Category 4: Attended Data Center
- Category 5: Unattended Data Center

Category 1: Floor-standing in Office Environment

When Dell determines that a specific Enterprise product is to be used on a table-top in office environment, for example, on a desk around a seated user's head height, and then the acoustical specification of the following table applies. Small, light-weight towers are examples of these types of products.

Table 19. Dell Enterprise Category 1, "Table-top in Office Environment" acoustical specification category.

Measurement Position re AC0158	Metric, re AC0159	Test Modes, re AC0159 (note must be in steady state, see AC0159, except where noted below)			
		Standby in 23±2° C Ambient	**Idle in 23±2° C Ambient**	**Operating in 23±2° C Ambient – if not otherwise specified in the program's configuration document, then processor and hard drive operating modes are required**	**Simulate (that is, set fan speeds representative) for Idle at 28° C & 35° C Ambient, and for 100% loading and maximum configuration, at 35° C Ambient**
Sound Power	LwA-m, bels	≤ 4.2	≤ 4.7	≤ 5.0	Report
Sound Quality (both positions must meet limits): Front Binaural HEAD and Rear Microphone	Tones, Hz, dB	No prominent tones per criteria D.10.6 and D.10.8 of ECMA-74			Report tones
	Tonality, tu	≤ 0.35	≤ 0.35	≤ 0.35	Report
	Dell Modulation, %	≤ 35	≤ 35	≤ 35	Report
	Loudness, sones	Report	Report	Report	Report
	LpA-single point, dBA	Report	Report	Report	Report
Front Binaural HEAD	Transients	• Oscillation (see AC0159), if observed, during 20-minute steady-state observation, must adhere to the following two criteria: ○ Max. {ΔLpA} < 3.0 dB ○ Event count < 3 for "1.5 dB < ΔLpA < 3.0 dB" ○ Acoustical Jump (see AC0159), during air mover speed transition from Idle to Operating Mode must be ≤ 15 dB. • Startup behavior ○ Report Startup behavior re. AC0159 ○ Startup must proceed smoothly, that is, no sudden or large jumps, and fan speed during startup must not exceed 50% of its maximum • Transient inputs: Report time-history sound pressure levels re AC0159 "Train of Step Functions on Processor"			N/A
Any	Other	No rattles, squeaks, or unexpected noises Sound should be "even" around the EUT (one side should not be dramatically louder than another) Unless otherwise specified, the "default" thermal-related settings shall be selected for BIOS and iDRAC. Specific operating conditions will be defined in "Configurations & Configuration Dependencies" for each platform.			

Table 19. Dell Enterprise Category 1, "Table-top in Office Environment" acoustical specification category. (continued)

Measurement Position re AC0158	Metric, re AC0159	Test Modes, re AC0159 (note must be in steady state, see AC0159, except where noted below)			
		Standby in 23±2° C Ambient	Idle in 23±2° C Ambient	Operating in 23±2° C Ambient – if not otherwise specified in the program's configuration document, then processor and hard drive operating modes are required	Simulate (that is, set fan speeds representative) for Idle at 28° C & 35° C Ambient, and for 100% loading and maximum configuration, at 35° C Ambient
Sound Pressure	LpA-reported, dBA, re AC0158 and program configuration document	Report for all mics	Report for all mics	Report for all mics	Report for all mics

Category 2: Floor-standing in Office Environment

When Dell determines that a specific Enterprise product is to be used primarily when it is sitting on the floor, that is, next to a user's feet, then the acoustical specification in the table below applies. Noise from the product should not annoy or otherwise interfere with the user's thoughts or speech, for example, on the telephone.

Table 20. Dell Enterprise Category 2, "Floor-standing in Office Environment" acoustical specification category

Measurement Position re AC0158	Metric, re AC0159	Test Modes, re AC0159 (note must be in steady state, see AC0159, except where noted below)			
		Standby in 23±2° C Ambient	Idle in 23±2° C Ambient	Operating in 23±2° C Ambient – if not otherwise specified in the program's configuration document, then processor and hard drive operating modes are required	Simulate (that is, set fan speeds representative) for Idle at 28° C & 35° C Ambient, and for 100% loading and maximum configuration, at 35° C Ambient
Sound Power	LwA-m, bels	≤ 4.9	≤ 5.1	≤ 5.4	Report
Sound Quality (both positions must meet limits): Front Binaural HEAD and Rear Microphone	Tones, Hz, dB	No prominent tones per criteria D.10.6 and D.10.8 of ECMA-74			Report tones
	Tonality, tu	≤ 0.35	≤ 0.35	≤ 0.35	Report
	Dell Modulation, %	≤ 35	≤ 35	≤ 35	Report
	Loudness, sones	Report	Report	Report	Report
	LpA-single point, dBA	Report	Report	Report	Report
Front Binaural HEAD	Transients	• Oscillation (see AC0159), if observed, during 20-minute steady-state observation, must adhere to the following two criteria: ○ Max. {ΔLpA} < 3.0 dB			N/A

Table 20. Dell Enterprise Category 2, "Floor-standing in Office Environment" acoustical specification category (continued)

Measurement Position re AC0158	Metric, re AC0159	Test Modes, re AC0159 (note must be in steady state, see AC0159, except where noted below)			
		Standby in 23±2° C Ambient	**Idle in 23±2° C Ambient**	**Operating in 23±2° C Ambient – if not otherwise specified in the program's configuration document, then processor and hard drive operating modes are required**	**Simulate (that is, set fan speeds representative) for Idle at 28° C & 35° C Ambient, and for 100% loading and maximum configuration, at 35° C Ambient**
		○ Event count < 3 for "1.5 dB < ΔLpA < 3.0 dB" ● Acoustical Jump (see AC0159), during air mover speed transition from Idle to Operating Mode must be ≤ 15 dB. ● Startup behavior ○ Report Startup behavior re. AC0159 ○ Startup must proceed smoothly, that is, no sudden or large jumps, and fan speed during startup must not exceed 50% of its maximum ● Transient inputs: Report time-history sound pressure levels re AC0159 "Train of Step Functions on Processor"			
Any	Other	● No rattles, squeaks, or unexpected noises ● Sound should be "even" around the EUT (one side should not be dramatically louder than another) ● Unless otherwise specified, the "default" thermal-related settings shall be selected for BIOS and iDRAC. ● Specific operating conditions are defined in "Configurations and Configuration Dependencies" for each platform.			
Sound Pressure	LpA-reported, dBA, re AC0158 and program configuration document	Report for all mics	Report for all mics	Report for all mics	Report for all mics

Category 3: General Use Space

When Dell determines that a specific Enterprise product is to be predominantly used in a general use space, then the acoustical specification of the table below applies. These products could be found in laboratories, schools, restaurants, open office space layouts, small ventilated closets, etc., though not in close proximity to any particular person nor in quantities greater than a few in any location. People within proximity of a few of these products should not experience any impact to speech intelligibility or annoyance from the noise of the product. A rack product sitting on a table in a common area is an example.

Table 21. Dell Enterprise Category 3, "General Use" acoustical specification category

Measurement Position re AC0158	Metric, re AC0159	Test Modes, re AC0159 (note must be in steady state, see AC0159, except where noted below)			
		Standby in 23±2° C Ambient	**Idle in 23±2° C Ambient**	**Operating in 23±2° C Ambient – if not otherwise specified in the program's configuration document, then processor and hard drive operating modes are required**	**Simulate (that is, set air mover speeds representative) for Idle at 28° C & 35° C Ambient and for 100% loading and maximum configuration, at 35° C Ambient**
Sound Power	LwA-m, bels	≤ 5.2	≤ 5.5	≤ 5.8	Report
Sound Quality (both positions must meet limits): Front Binaural HEAD and Rear Microphone	Tones, Hz, dB	No prominent tones per criteria D.10.6 and D.10.8 of ECMA-74			Report tones
	Tonality, tu	≤ 0.35	≤ 0.35	≤ 0.35	Report
	Dell Modulation, %	≤ 40	≤ 40	≤ 40	Report
	Loudness, sones	Report	Report	Report	Report
	LpA-single point, dBA	Report	Report	Report	Report
Front Binaural HEAD	Transients	• Oscillation (see AC0159), if observed, during 20-minute steady-state observation, must adhere to the following two criteria: ○ Max. {ΔLpA} < 3.0 dB ○ Event count < 3 for "1.5 dB < ΔLpA < 3.0 dB" • Report Acoustical Jump (see AC0159) during air mover speed transition from Idle to Operating Mode. • Startup behavior ○ Report Startup behavior re. AC0159 ○ Startup must proceed smoothly, that is, no sudden or large jumps, and air mover speed during startup must not exceed 50% of its maximum • Transient inputs: Report time-history sound pressure levels re AC0159 "Train of Step Functions on Processor"			N/A
Any	Other	No rattles, squeaks, or unexpected noises Sound should be "even" around the EUT (one side should not be dramatically louder than another) Unless otherwise specified, the "default" thermal-related settings shall be selected for BIOS and iDRAC. Specific operating conditions will be defined in "Configurations & Configuration Dependencies" for each platform.			
Sound Pressure	LpA-reported, dBA, re AC0158 and program configuration document	Report for all mics	Report for all mics	Report for all mics	Report for all mics

Category 4: Attended Data Center

When Dell determines that a specific Enterprise product is to be predominantly used in an attended data center, then the acoustical specification of the table applies. The phrase “attended data center” is used to mean a space in which many (from tens to 1000s) of Enterprise products are deployed in proximity (that is, in the same room) to personnel whose speech (perhaps with raised voices) is expected to be intelligible over the data center noise. Hearing protection or hearing monitoring programs are not expected in these areas. Examples in this category include monolithic rack products.

Table 22. Dell Enterprise Category 4, “Attended Data Center” acoustical specification category.

Measurement Position re AC0158	**Metric, re AC0159**	**Test Modes, re AC0159 (note must be in steady state, see AC0159, except where noted below)**				**Simulate (that is, set fan speeds representative) for 100% loading and maximum configuration, at 35° C Ambient**
		Standby in 23±2° C Ambient	**Idle in 23±2° C Ambient**	**Operating in 23±2° C Ambient – if not otherwise specified in the program’s configuration document, then processor and hard drive operating modes are required**	**Simulate (that is, set fan speeds representative) for Idle at 28° C & 35° C Ambient**	
Sound Power	LwA-m, B	Report	≤ 6.9	≤ 7.1	Report	≤ 8.2
Front Binaural HEAD	Tones, Hz, dB	Report	< 15 dB	< 15 dB	Report	< 20 dB
	Tonality, tu	Report	Report	Report	Report	Report
	Dell Modulation, %	Report	Report	Report	Report	Report
	Loudness, sones	Report	Report	Report	Report	Report
	LpA-single point, dBA	Report	Report	Report	Report	Report
	Transients	• Oscillation (see AC0159), if observed, during 20-minute steady-state observation, must adhere to the following two criteria: ○ Max. {ΔLpA} < 3.0 dB ○ Event count < 3 for “1.5 dB < ΔLpA < 3.0 dB” ○ Acoustical Jump (see AC0159), during air mover speed transition from Idle to Operating Mode must be ≤ 15 dB. ○ Startup behavior ▪ Report Startup behavior re. AC0159 ▪ Startup must proceed smoothly, that is, no sudden or large jumps, and fan speed during startup must not exceed 50% of its maximum ∞ Transient inputs: Report time-history sound pressure levels re AC0159 “Train of Step Functions on Processor”			N/A	
Any	Other	No rattles, squeaks, or unexpected noises Sound should be “even” around the EUT (one side should not be dramatically louder than another) Unless otherwise specified, the “default” thermal-related settings shall be selected for BIOS and iDRAC.				

Table 22. Dell Enterprise Category 4, "Attended Data Center" acoustical specification category. (continued)

Measurement Position re AC0158	Metric, re AC0159	Test Modes, re AC0159 (note must be in steady state, see AC0159, except where noted below)				Simulate (that is, set fan speeds representative) for 100% loading and maximum configuration, at 35° C Ambient
		Standby in 23±2° C Ambient	Idle in 23±2° C Ambient	Operating in 23±2° C Ambient – if not otherwise specified in the program's configuration document, then processor and hard drive operating modes are required	Simulate (that is, set fan speeds representative) for Idle at 28° C & 35° C Ambient	
		Specific operating conditions will be defined in "Configurations & Configuration Dependencies" for each platform.				
Sound Pressure	LpA-reported, dBA	Report for all mics	Report for all mics	Report for all mics	Report for all mics	Report for all mics

Category 5: Unattended Data Center

When Dell determines that a specific Enterprise product is to be predominantly used in an unattended data center (and not blades or blade enclosures; these have their own category), then the acoustical specification in the table below applies. The phrase "unattended data center" is used to mean a space in which many (from tens to 1000s) of Enterprise products are deployed together, its own heating and cooling systems condition the space, and operators or servicers of equipment enter generally only to deploy, service, or decommission equipment. Hearing protection or hearing monitoring programs may be expected (per government or company guidelines) in these areas. Examples in this category include monolithic rack products.

Table 23. Dell Enterprise Category 5, "Unattended Data Center" acoustical specification category

Measurement Position re AC0158	Metric, re AC0159	Test Modes, re AC0159 (note must be in steady state, see AC0159, except where noted below)				Simulate (that is, set air mover speeds representative) for 100% loading and maximum configuration, at 35° C Ambient
		Standby in 23±2° C Ambient	Idle in 23±2° C Ambient	Operating in 23±2° C Ambient – if not otherwise specified in the program's configuration document, then processor and hard drive operating modes are required	Simulate (that is, set air mover speeds representative) for Idle at 28° C & 35° C Ambient	
Sound Power	LwA-m, bels	Report	≤ 7.5	≤ 7.7	Report	≤ 8.7
Front Binaural HEAD	Tones, Hz, dB	Report	< 15 dB	< 15 dB	Report	< 20 dB
	Tonality, tu	Report	Report	Report	Report	Report
	Dell Modulation, %	Report	Report	Report	Report	Report
	Loudness, sones	Report	Report	Report	Report	Report

Table 23. Dell Enterprise Category 5, "Unattended Data Center" acoustical specification category (continued)

Measurement Position re AC0158	Metric, re AC0159	Test Modes, re AC0159 (note must be in steady state, see AC0159, except where noted below)				Simulate (that is, set air mover speeds representative) for 100% loading and maximum configuration, at 35° C Ambient
		Standby in 23±2° C Ambient	Idle in 23±2° C Ambient	Operating in 23±2° C Ambient – if not otherwise specified in the program's configuration document, then processor and hard drive operating modes are required	Simulate (that is, set air mover speeds representative) for Idle at 28° C & 35° C Ambient	
	LpA-single point, dBA	Report	Report	Report	Report	Report
Front Binaural HEAD	Transients	• Oscillation (see AC0159), if observed, during 20-minute steady-state observation, must adhere to the following two criteria: ○ Max. {ΔLpA} < 3.0 dB ○ Event count < 3 for "1.5 dB < ΔLpA < 3.0 dB" • Report Acoustical Jump (see AC0159) during air mover speed transition from Idle to Operating Mode. • Startup behavior ○ Report Startup behavior re. AC0159 ○ Startup must proceed smoothly, that is, no sudden or large jumps, and air mover speed during startup must not exceed 50% of its maximum • Transient inputs: Report time-history sound pressure levels re AC0159 "Train of Step Functions on Processor"				N/A	
Any	Other	No rattles, squeaks, or unexpected noises Sound should be "even" around the EUT (one side should not be dramatically louder than another) Unless otherwise specified, the "default" thermal-related settings shall be selected for BIOS and iDRAC. Specific operating conditions will be defined in "Configurations & Configuration Dependencies" for each platform.				
Sound Pressure	LpA-reported, dBA, re AC0158 and program configuration document	Report for all mics	Report for all mics	Report for all mics	Report for all mics	Report for all mics

10

Rack, rails, and cable management

Topics:

- Rails and cable management information

Rails and cable management information

The rail offerings for the PowerEdge R760xa consist of two general types: sliding rail and static rail. The cable management offerings consist of an optional strain relief bar (SRB).

See the Enterprise Systems Rail Sizing and Rack Compatibility Matrix for information regarding:

- Specific details about rail types.
- Rail adjustability ranges for various rack mounting flange types.
- Rail depth with and without cable management accessories.
- Rack types that are supported for various rack mounting flange types.

Key factors governing proper rail selection include the following:

- Spacing between the front and rear mounting flanges of the rack.
- Type and location of any equipment that is mounted in the back of the rack such as power distribution units (PDUs).
- Overall depth of the rack.

Combo rails features summary

The sliding rails allow the system to be fully extended out of the rack for service. There is only one type of Combo rail available, Stab-in/Drop-in sliding rails. The rails are available with or without the strain relief bar (SRB).

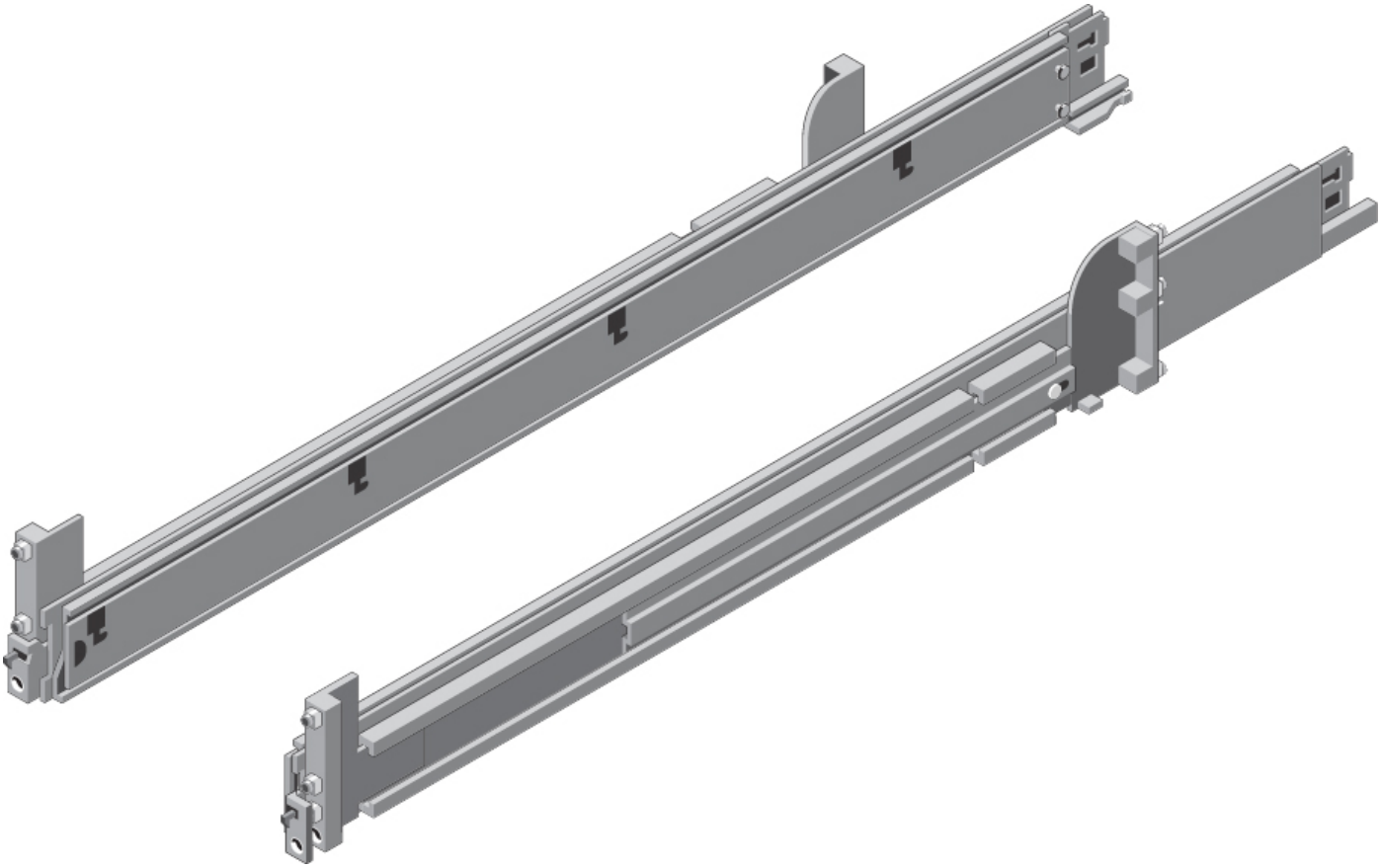

Figure 17. Combo rails

B25 Stab-in/Drop-in sliding rails for 4-post racks

- Supports drop-in or stab-in installation of the chassis to the rails.
- Support for tool-less installation in 19" EIA-310-E compliant square, unthreaded round hole racks including all generations of the Dell racks. Also supports tool-less installation in threaded round hole 4-post racks.
- Support for tool-less installation in Dell Titan or Titan-D racks.
- Support full extension of the system out of the rack to allow serviceability of key internal components.
- Support for optional strain relief bar (SRB).

Scan the QRL code for the documentation and trouble-shooting information regarding the installation procedures for Drop-in/ Stab-in rail types.



Figure 18. Quick resource locator for combo rails

B33 Stab-in static rail summary

The static rails offer a greater adjustability range and a smaller overall mounting footprint than the sliding rails because of their reduced complexity and lack of need for CMA support. The static rails support a wider variety of racks than the sliding rails. However, they do not support serviceability in the rack and are thus not compatible with the CMA. The static rails are also not compatible with SRB.



Figure 19. Static rails

Stab-in static feature summary

Static rails for 4-post and 2-post racks:

- Supports Stab-in installation of the chassis to the rails.
- Support tool-less installation in 19" EIA-310-E compliant square or unthreaded round hole 4-post racks including all generations of Dell racks.
- Support tooled installation in 19" EIA-310-E compliant threaded hole 4-post and 2-post racks.
- Support tool-less installation in Dell Titan or Titan-D rack.

NOTE:

- Screws are not included with the static rail kit since racks are offered with various thread types. The screws are provided for mounting static rails in racks with threaded mounting flanges.
- Screw head diameter should be 10 mm or less.

2-Post racks installation

If installing to 2-Post (Telco) racks, the ReadyRails stab-in static rails(B33) must be used. Sliding rails support mounting in 4-post racks only.



Figure 20. Static rails in 2-post center mount configuration

Installation in the Dell Titan or Titan-D racks

For tool-less installation in Titan or Titan-D racks, the Stab-in/Drop-in sliding rails (B22) must be used. This rail collapses down sufficiently to fit in the rack with mounting flanges that are spaced about 24 inches apart from front to back. The Stab-in/Drop-in sliding rail allows bezels of the servers and storage systems to be aligned when installed in these racks. For tooled installation, Stab-in Static rails (B20) must be used for bezel alignment with storage systems.

Strain Relief Bar (SRB)

The optional strain relief bar (SRB) for the PowerEdge R760xa organizes and supports cable connections at the rear end of the server to avoid damage from bending.

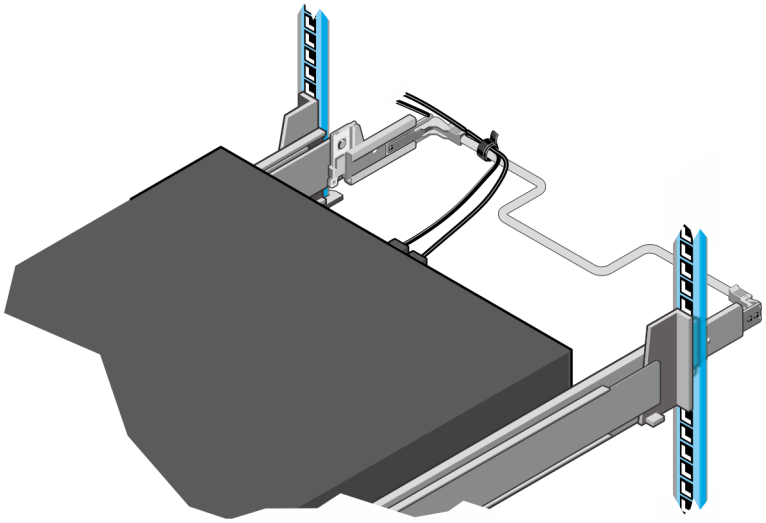

Figure 21. Strain relief bar

- Tool-less attachment to the rails
- Two depth positions to accommodate various cable loads and rack depths
- Supports cable loads and controls stresses on server connectors
- Cables can be segregated into discrete purpose-specific bundles

Rack Installation

Drop-in design means that the system is installed vertically into the rails by inserting the standoffs on the sides of the system into the J-slots in the inner rail members with the rails in the fully extended position. The recommended method of installation is to first insert the rear standoffs on the system into the rear J-slots on the rails to free up a hand and then rotate the system down into the remaining J-slots while using the free hand to hold the rail against the side of the system.

Stab-in design means that the inner (chassis) rail members must first be attached to the sides of the system and then inserted into the outer (cabinet) members installed in the rack.

Installing the system into the rack (option A: Drop-In)

1. Pull the inner rails out of the rack until they lock into place.



Figure 22. Pull out inner rail

2. Locate the rear rail standoff on each side of the system and lower them into the rear J-slots on the slide assemblies.
3. Rotate the system downward until all the rail standoffs are seated in the J-slots.

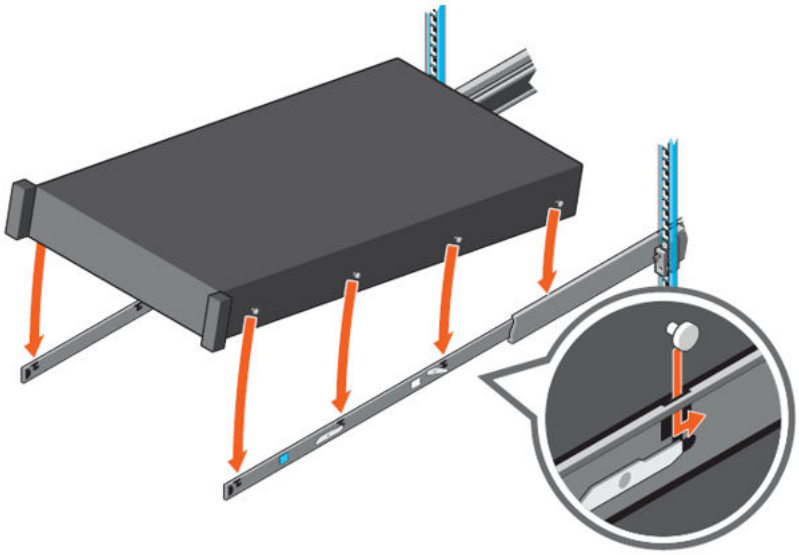

Figure 23. Rail standoffs seated in J-slots

4. Push the system inward until the lock levers click into place.

5. Pull the blue side release lock tabs forward or backward on both rails and slide the system into the rack until the system is in the rack.

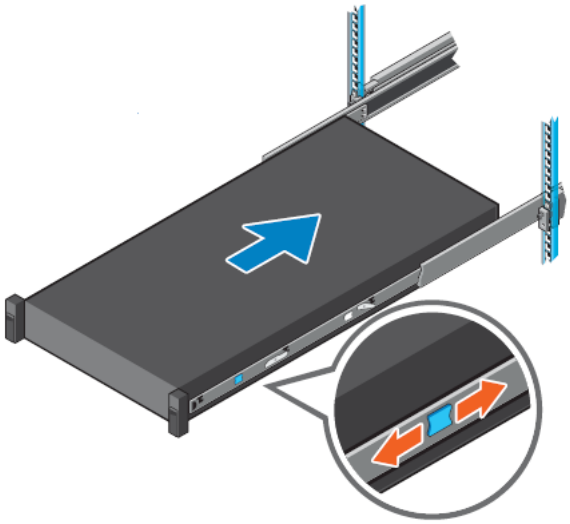

Figure 24. Slide system into the rack

Installing the system into the rack (option B: Stab-In)

1. Pull the intermediate rails out of the rack until they lock into place.
2. Release the inner rail lock by pulling forward on the white tabs and sliding the inner rail out of the intermediate rails.

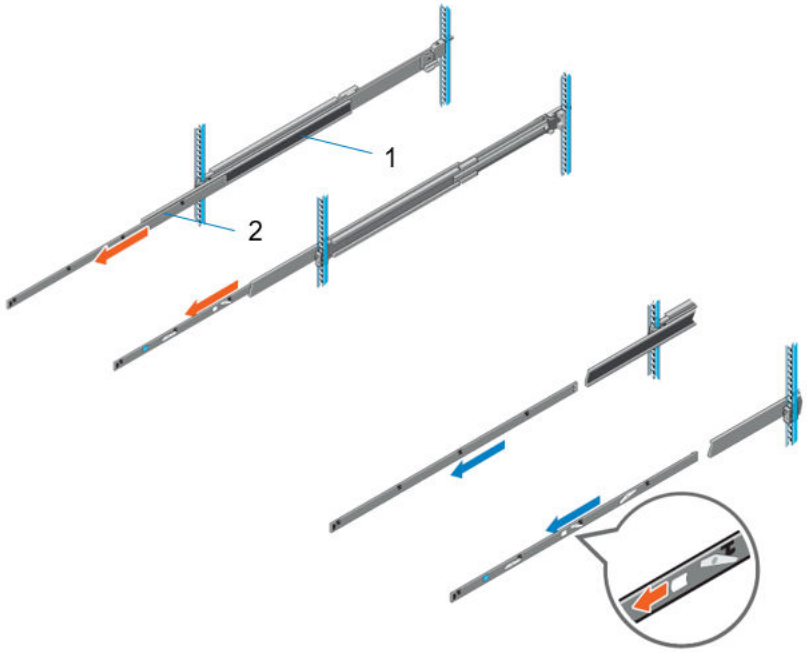

Figure 25. Pull out the intermediate rail

Table 24. Rail component label

Number	Component
1	Intermediate rail
2	Inner rail

3. Attach the inner rails to the sides of the system by aligning the J-slots on the rail with the standoffs on the system and sliding forward on the system until they lock into place.

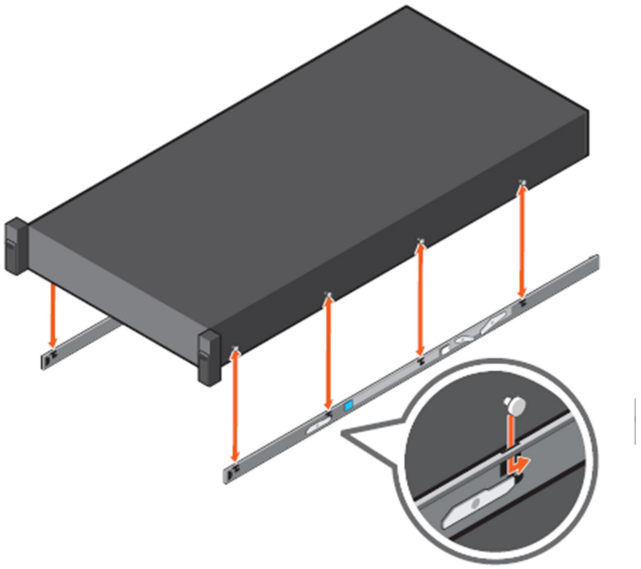

Figure 26. Attach the inner rails to the system

4. With the intermediate rails extended, install the system into the extended rails.

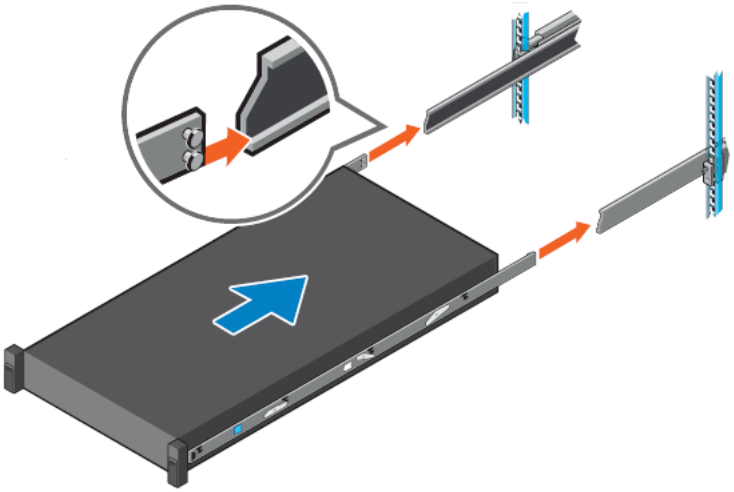

Figure 27. Install system into the extended rails

5. Pull blue slide release lock tabs forward or backward on both rails, and slide the system into the rack.

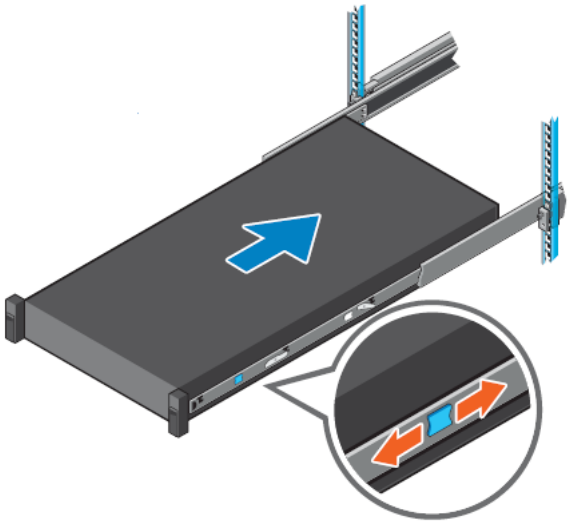

Figure 28. Slide system into the rack

11

Operating Systems and Virtualization

Topics:

- Supported Operating Systems

Supported Operating Systems

The PowerEdge system supports the following operating systems:

- Canonical® Ubuntu® Server LTS
- Microsoft® Windows Server® with Hyper-V
- Red Hat® Enterprise Linux
- SUSE® Linux Enterprise server
- VMware® ESXi®

Links to specific OS versions and editions, certification matrices, Hardware Compatibility Lists (HCL) portal, and Hypervisor support are available at Dell Enterprise Operating Systems.

12

Dell OpenManage Systems Management

Dell delivers management solutions that help IT administrators effectively deploy, update, monitor, and manage IT assets. OpenManage solutions and tools enable you to quickly respond to problems by helping them to manage Dell servers efficiently; in physical, virtual, local, and remote environments; all without the need to install an agent in the operating system.

Topics:

- Integrated Dell Remote Access Controller (iDRAC)
- Systems Management software support matrix

Integrated Dell Remote Access Controller (iDRAC)

iDRAC9 delivers advanced, agent-free, local and remote server administration. Embedded in every PowerEdge server, iDRAC9 provides a secure means to automate a multitude of common management tasks. Because iDRAC is embedded within every PowerEdge server, there is no additional software to install; just plug in power and network cables, and iDRAC is ready to go. Even before installing an operating system (operating system) or hypervisor, IT administrators have a complete set of server management features at their fingertips.

With iDRAC9 in-place across the Dell PowerEdge portfolio, the same IT administration techniques and tools can be applied throughout. This consistent management platform allows easy scaling of PowerEdge servers as an organization's infrastructure grows. Customers can use the iDRAC RESTful API for the latest in scalable administration methods of PowerEdge servers. With this API, iDRAC enables support for the Redfish standard and enhances it with Dell extensions to optimize at-scale management of PowerEdge servers. By having iDRAC at the core, the entire OpenManage portfolio of Systems Management tools allows every customer to tailor an effective, affordable solution for any size environment.

Zero Touch Provisioning (ZTP) is embedded in iDRAC. ZTP - Zero Touch Provisioning is Intelligent Automation Dell's agent-free management puts IT administrators in control. Once a PowerEdge server is connected to power and networking, that system can be monitored and fully managed, whether you're standing in front of the server or remotely over a network. In fact, with no need for software agents, an IT administrator can: · Monitor · Manage · Update · Troubleshoot and remediate Dell servers With features like zero-touch deployment and provisioning, iDRAC Group Manager, and System Lockdown, iDRAC9 is purpose-built to make server administration quick and easy. For those customers whose existing management platform utilizes in-band management, Dell does provide iDRAC Service Module, a lightweight service that can interact with both iDRAC9 and the host operating system to support legacy management platforms.

When ordered with DHCP enabled from the factory, PowerEdge servers can be automatically configured when they are initially powered up and connected to your network. This process uses profile-based configurations that ensure each server is configured per your specifications. This feature requires an iDRAC Enterprise license.

iDRAC9 offers following license tiers:

Table 25. iDRAC9 license tiers

License	Description
iDRAC9 Basic	• Available only on 100-500 series rack/tower • Basic instrumentation with iDRAC web UI • For cost conscious customers that see limited value in management
iDRAC9 Express	• Default on 600+ series rack/tower, modular, and XR series • Includes all features of Basic • Expanded remote management and server life-cycle features
iDRAC9 Enterprise	• Available as an upsell on all servers • Includes all features of Basic and Express. Includes key features such as virtual console, AD/LDAP support, and more • Remote presence features with advanced, Enterprise-class, management capabilities

Table 25. iDRAC9 license tiers (continued)

License	Description
iDRAC9 Datacenter	• Available as an upsell on all servers • Includes all features of Basic, Express, and Enterprise. Includes key features such as telemetry streaming, Thermal Manage, automated certificate management, and more • Extended remote insight into server details, focused on high end server options, granular power, and thermal management

For a full list of iDRAC features by license tier, see Integrated Dell Remote Access Controller 9 User's Guide at Dell.com.

For more details on iDRAC9 including white papers and videos, see:

- Support for Integrated Dell Remote Access Controller 9 (iDRAC9) on the Knowledge Base page at Dell.com

Systems Management software support matrix

Table 26. Systems Management software support matrix

Categories	Features	PE mainstream
Embedded Management and In-band Services	iDRAC9 (Express, Enterprise, and Datacenter licenses)	Supported
	OpenManage Mobile	Supported
	OM Server Administrator (OMSA)	Supported
	iDRAC Service Module (iSM)	Supported
	Driver Pack	Supported
Change Management	Update Tools (Repository Manager, DSU, Catalogs)	Supported
	Server Update Utility	Supported
	Lifecycle Controller Driver Pack	Supported
	Bootable ISO	Supported
Console and Plug-ins	OpenManage Enterprise	Supported
	Power Manager Plug-in	Supported
	Update Manager Plug-in	Supported
	SupportAssist Plug-in	Supported
	CloudIQ	Supported
Integrations and connections	OM Integration with VMware Vcenter/vROps	Supported
	OM Integration with Microsoft System Center (OMIMSC)	Supported
	Integrations with Microsoft System Center and Windows Admin Center (WAC)	Supported
	ServiceNow	Supported
	Ansible	Supported
	Third-party Connectors (Nagios, Tivoli, Microfocus)	Supported
Security	Secure Enterprise Key Management	Supported
	Secure Component Verification	Supported
Standard operating system	Red Hat Enterprise Linux, SUSE, Windows Server 2019 or 2022, Ubuntu, CentOS	Supported (Tier-1)

13

Appendix D: Services

Topics:

- Why attach service contracts
- ProSupport Infrastructure Suite
- Specialty Support Services
- ProDeploy Infrastructure Suite
- Supplemental Deployment Services
- Unique Deployment Scenarios
- DAY 2 - Automation Services with Ansible
- Consulting Services
- Resources

Why attach service contracts

Dell PowerEdge servers include a standard hardware warranty that highlights our commitment to product quality by guaranteeing repair or replacement of defective components. While industry-leading, our warranties are limited to 1 or 3 years, depending on model, and do not cover software assistance. Call records show that failure rates for servers are roughly 1% and more commonly, customers seek Dell technical support for software related issues like configuration guidance, troubleshooting, upgrade assistance or performance tuning. Encourage customers to purchase ProSupport service contracts to supplement warranty coverage and ensure optimal support for both hardware and software. ProSupport provides a complete hardware guarantee beyond the original warranty period (up to 12 years: including seven years standard support and an additional five years of Post-Standard Support). Details of the ProSupport Suite and benefits are listed below.

ProSupport Infrastructure Suite

ProSupport Infrastructure Suite is a set of support services that enable customers to build the solution that is right for their organization. It is an industry-leading, enterprise-class support that aligns with the criticality of your systems, the complexity of your environment, and the allocation of your IT resources.

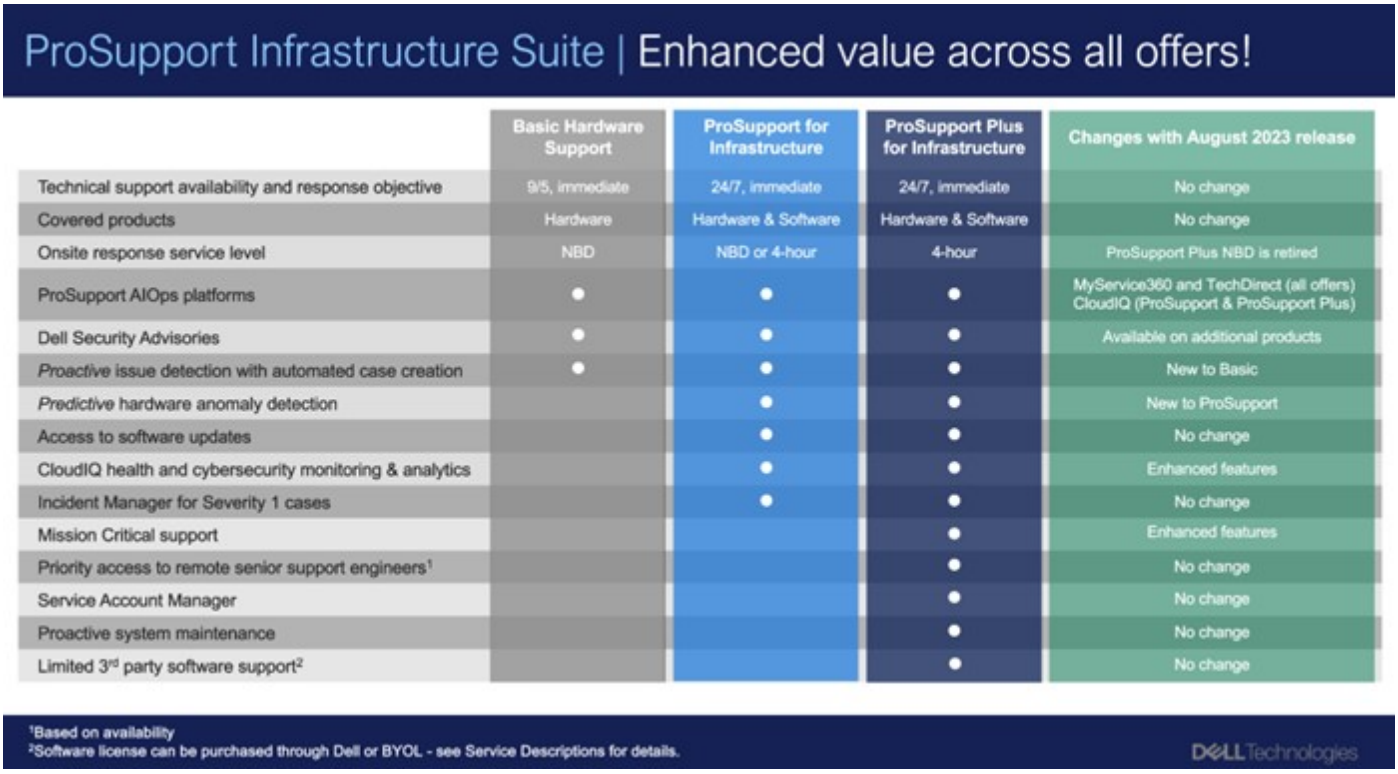

Figure 29. ProSupport Enterprise Suite

ProSupport Plus for Infrastructure

ProSupport Plus for Infrastructure is the ultimate solution for customers seeking preventative maintenance and optimal performance on their business-critical assets. The service caters to customers who require proactive, predictive, and personalized support for systems that manage critical business applications and workloads. When customers purchase PowerEdge server, we recommend ProSupport Plus, our proactive and preventative support service for business-critical systems. ProSupport Plus provides all the benefits of ProSupport, including the following "Top five reasons to buy PSP".

1. Priority access to specialized support experts - immediate, advanced troubleshooting from an engineer that understands Dell infrastructure solutions.
2. Mission Critical Support – when critical (Severity 1) support issues happen, the customer is assured that we will do all we can to get them back up and running as quickly as possible.
3. Service Account Manager – a customer's #1 support advocate, ensuring they get the best possible proactive and predictive support experience.
4. Systems maintenance – on a semi-annual basis, we will keep a customer's ProSupport Plus system(s) up to date by installing the latest firmware, BIOS, and driver updates to improve performance and availability.
5. 3rd party software support – Dell is a customer's single point of accountability for any eligible 3rd party software installed on their ProSupport Plus system, whether they purchased the software from us or not.

ProSupport for Infrastructure

Comprehensive 24x7 support for hardware and software - best for production, but not critical, workloads and applications. The ProSupport service offers highly trained experts around the clock and around the globe to address IT needs. We help minimize disruptions and maximize availability of PowerEdge server workloads with:

- 24x7 support through phone, chat and online
- A central point of accountability for all hardware and software issues
- Hypervisor, operating system and application support
- Dell security advisories
- Onsite response service levels 4 hour or Next Business Day options
- Proactive issue detection with automated case creation
- Predictive hardware anomaly detection

- Incident Manager assigned for Severity 1 cases
- Collaborative third-party support
- Access to AIOps Platforms - (MyService360, TechDirect, and CloudIQ)
- Consistent experience regardless of where customers are located or what language they speak.

Basic Hardware Support

Provides reactive hardware support during normal business hours, excluding local national holidays. No software support or software related guidance. For improved levels of support choose ProSupport or ProSupport Plus.

Specialty Support Services

Optional specialty support services complement the ProSupport Infrastructure Suite to provide additional proficiencies that are critical for modern data center operations.

Hardware coverage add-ons to ProSupport

- **Keep Your Hard Drive (KYHD) and Keep Your Component (KYC):** Normally if a device fails under warranty, Dell replaces it using a one-for-one exchange process. KYHD / KYC gives you the option to retain your device. It provides full control of sensitive data and minimizes security risk by letting you retain possession of failed drives / components when receiving replacement parts without incurring additional cost.
- **Onsite Diagnosis Service:** Ideal for sites with non-technical staff. Dell field technician performs initial troubleshooting diagnosis onsite and transfers to Dell remote engineers to resolve the issue.
- **ProSupport Add-on for HPC:** Sold as an add-on to a ProSupport service contract, the ProSupport Add-on for HPC provides solution-aware support to cover the additional requirements that are required to maintain an HPC environment such as:
  - Access to senior HPC experts
  - Advanced HPC cluster assistance: performance, interoperability, and configuration
  - Enhanced HPC solution level end-to-end support
  - Remote pre-support engagement with HPC Specialists during ProDeploy implementation
- **ProSupport Add-on for Telco (Respond & Restore):** An add-on service designed for the top 31 TELCO customers globally, Respond & Restore provides direct access to Dell solution experts who specialize in TELCO carrier-grade support. This add-on also provides a hardware uptime guarantee, meaning if a system fails, Dell will have it installed and operational within 4 hours for Severity 1 issues. Dell incurs penalties and fees if SLAs are not met.

Supplemental Site-wide Expertise

- **Multivendor Support Service:** Support your 3rd party devices as one service plan for servers, storage and networking (includes coverage for: Broadcom, Cisco, Fujitsu, HPE, Hitachi, Huawei, IBM, Lenovo, NetApp, Oracle, Quanta, SuperMicro & others).
- **Technical Account Manager:** Designated technology lead who monitors and manages performance and configuration of specific technology sets.
- **Designated Remote Support:** Personalized support expert who manages all troubleshooting and resolution of IT assets

Services for large enterprises

- **ProSupport One for Data Center:** ProSupport One for Data Center offers flexible site-wide support for large and distributed data centers with more than 1,000 assets (combined total of server, storage, networking, etc.). This offering is built on standard ProSupport features that leverage our global scale and are tailored to specific customer needs. While not for everyone, this service option offers a truly unique solution for our largest customers with the most complex environments.
  - Team of assigned Services Account Managers with remote or onsite options
  - Assigned technical and field engineers who are trained on the customer's environment and configurations
  - On-demand reporting and recommendations enabled by ProSupport AIOps tools (MyService360, TechDirect & CloudIQ)
  - Flexible onsite support and parts options that fit their operational model

- A tailored support plan and training for their operations staff

- **Logistics Online Inventory Solution (LOIS):**Ideal for large organizations that have their own staff to support their data center. Dell offers a service called Logistics Online Inventory Solution which is an onsite parts locker that provides self-maintainers with a local inventory of common replacement components. Having access to these parts lockers allows the self-maintainer to replace a failed component immediately without delay. Each replacement part would automatically initiate a replenishment of the parts inventory that is shipped next day or delivered onsite by Dell during a regular scheduled visit (called Scheduled Onsite Service). As part of the LOIS system, customers can integrate their systems directly to Dell TechDirect using APIs to help streamline the support management process.

End-of-Life Services

- **Post Standard Support (PSS):** Extend service life beyond the initial seven years of ProSupport, adding up to five more additional years of hardware coverage
- **Data Sanitization & Data Destruction:** Renders data unrecoverable on repurposed or retired products, ensuring security of sensitive data and enabling compliance and provides NIST compliant certification.
- **Asset Recovery Services:**Recycle, resale, and disposal of hardware. Helps you securely and responsibly retire IT assets that are no longer needed while protecting both your business and the planet.

ProDeploy Infrastructure Suite

ProDeploy Infrastructure Suite provides a variety of deployment offerings to satisfy a customer's unique needs. It is made up of five sub-offers: **Configuration Services**, **Rack Integration**, **Basic Deployment**, **ProDeploy**, and **ProDeploy Plus**.

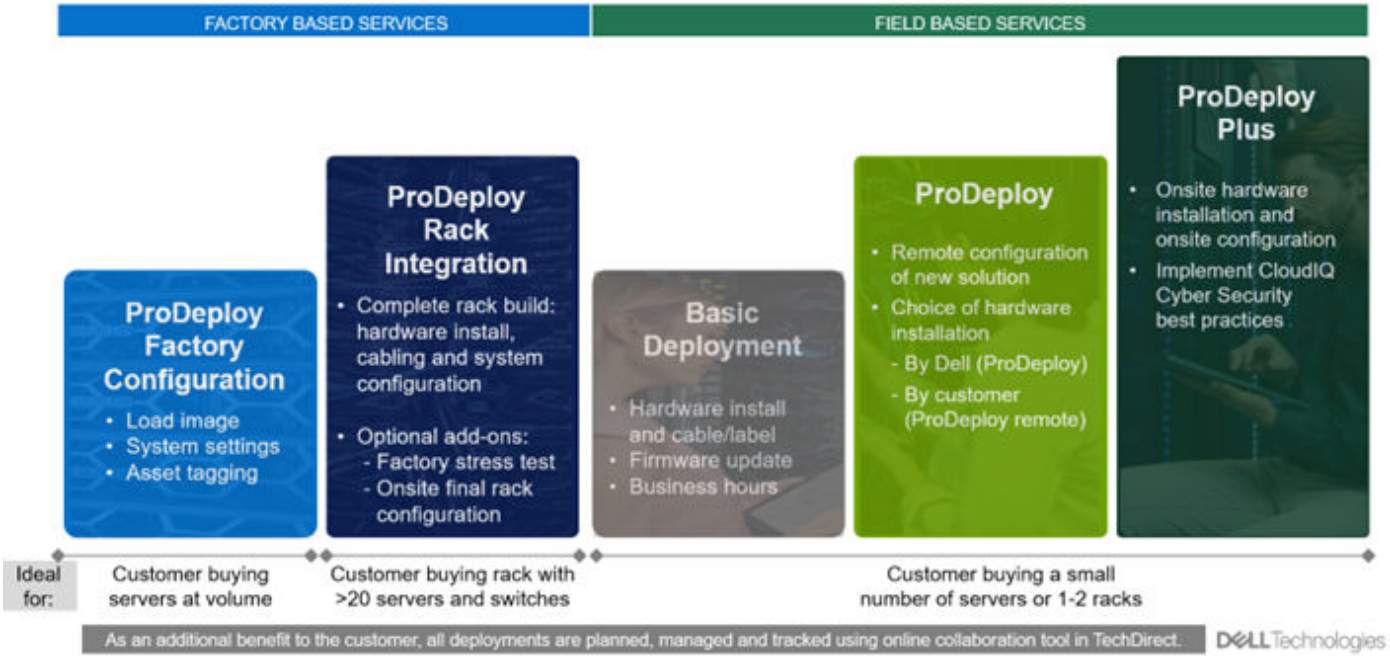

Figure 30. ProDeploy Infrastructure Suite

Factory Based Services

Pre-configured systems or complete racks, customized prior to shipping to the customer's site.

ProDeploy Factory Configuration

Ideal for customers buying servers in volume and seeking pre-configuration prior to shipping such as: custom image, system settings, and asset tagging so it arrives ready to use out of the box. Furthermore, servers are packaged and bundled to meet specific shipping and distribution requirements for each customer location to facilitate the rollout process. Once the server is

onsite , Dell can install and configure the server to the environment using any of the field-based deployment services outlined in the next section.

ProDeploy Rack Integration

Ideal for customers seeking to build out fully integrated racks prior to shipping. These rack builds include hardware install, cabling, and full system configuration. You can also add-on a factory stress test and an optional on-site final rack configuration to complete the rack installation.

- STANDARD SKUs for Rack Integration is available in the USA only and requires:
  - 20 or more devices (R and C series servers, VxRail, and all Dell or non-Dell switches)
  - Use Informational SKUs for Dell switches or 3rd party products.
  - Shipping to contiguous USA
- USE CUSTOM QUOTE for Rack Integration scenarios that require:
  - Shipment to any country or region outside USA or shipping outside contiguous USA
  - Shipping to multiple locations
  - Racks containing less than 20 servers
  - Any rack that includes Storage

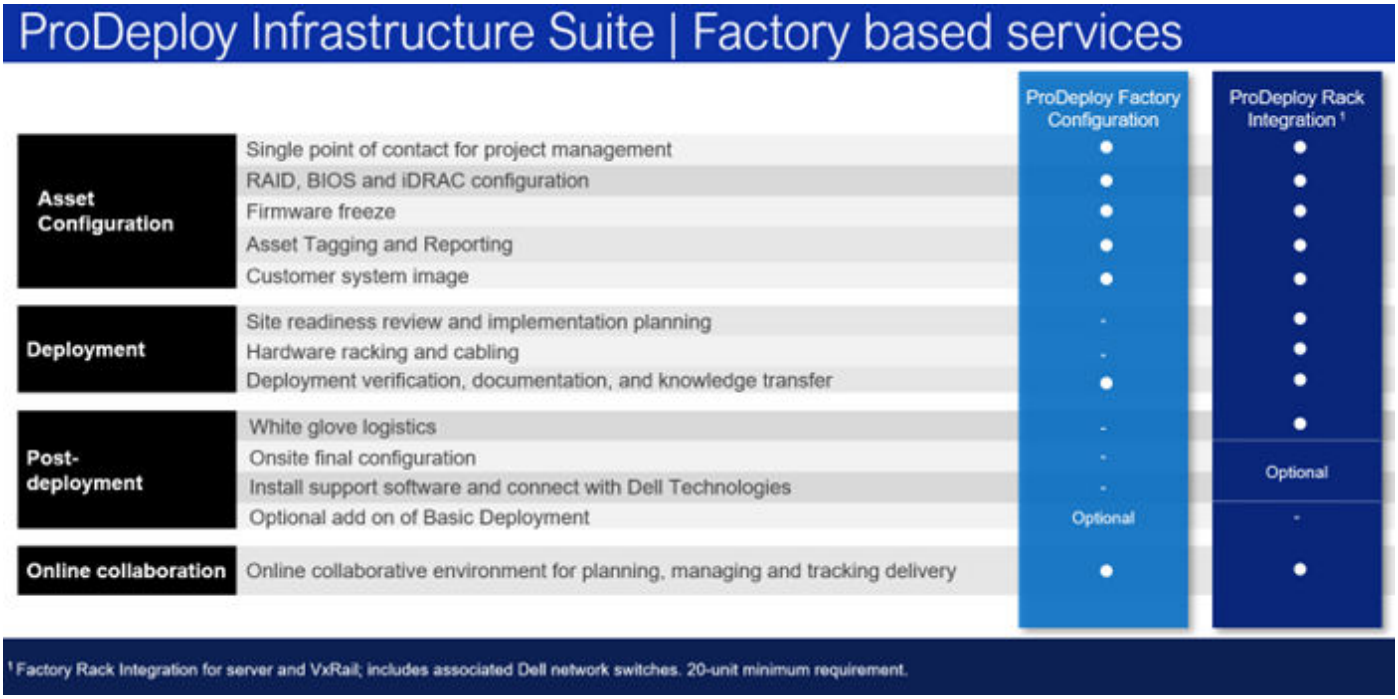

Figure 31. ProDeploy Infrastructure Suite - Factory services

Field-based Services

Put PowerEdge servers to work faster with Dell field-based deployment services. Whether we are deploying one server to one thousand – we have you covered. Dell provides versatile delivery options to fit every budget and operating model.

ProDeploy Plus

Elevate Infrastructure deployments with our most complete service from planning through onsite hardware installation and software configuration including the implementation of cybersecurity best practices. ProDeploy Plus provides the skill and scale needed to successfully execute demanding deployments in today's complex IT . The deployment starts with a site readiness review and implementation plan. Certified deployment experts perform the software configuration to include set up of leading operating systems and hypervisors. Dell will also configure PowerEdge software tools to include iDRAC and OpenManage system utilities as well as support AIOps platforms: MenvironmentsyService360, TechDirect, and CloudIQ. Unique to ProDeploy Plus, the cybersecurity implementation helps customers understand potential security risks and make recommendations for

reducing product attack surfaces. The system is tested, validated prior to completion. The customer will also receive full project documentation and knowledge transfer to complete the process.

ProDeploy

ProDeploy provides remote software configuration and choice of hardware installation (onsite or guided). ProDeploy is great for customers who are price sensitive or willing to participate in some portion of the deployment to include providing remote access to their network. The ProDeploy remote software implementation includes everything mentioned in ProDeploy Plus except it does not include the added value, cybersecurity implementation and best practices.

Basic Deployment

Basic Deployment delivers worry-free professional installation by experienced technicians. This service is often sold to Competency Enabled Partners who will have Dell do the hardware installation while they complete the software configuration. Furthermore, Basic Deployment tends to be purchased by large enterprises who have smart technical staff. These companies just need Dell to install the hardware and they will perform the software configuration. The last use case for Basic Deployment is when paired with Factory Configuration services. The servers are pre-configured in the factory and the basic deployment service will install the system into the rack to finalize the deployment.

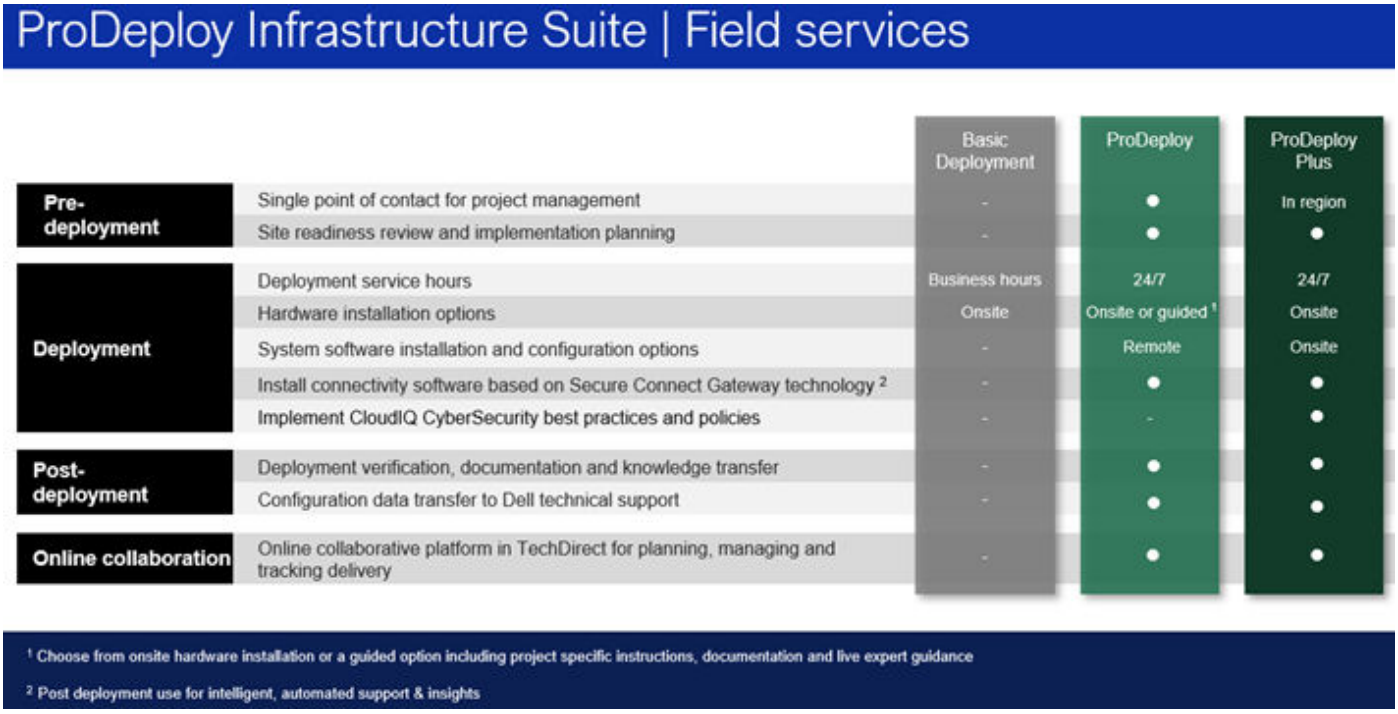

Figure 32. ProDeploy Infrastructure Suite - Field services

Supplemental Deployment Services

Additional ways to expand scope or deploy for unique scenarios.

Two Host Adder (requires PD/PDP)

Deploying new storage, compute, or networking devices may require interconnection to other servers (also called hosts). The Dell delivery team will set up four hosts per device as part of every ProDeploy service. For example, if the customer is buying two storage arrays the ProDeploy service will automatically include connectivity of four hosts each (4x2=8 total hosts per project since there are two devices). This supplemental "Two Host Adder" service provides for the configuration of additional hosts above what is already provided as part of the ProDeploy service. In many cases, customers can work with us while we set up the included hosts, so they may understand how to do the rest themselves. Always ask the customer how many hosts are

being connected and sell the host adder depending on the customer's technology skillset. Note that this service applies to the connectivity of Dell devices not 3rd party devices.

Additional Deployment Services (ADT) - sold with or without PD/PDP

You can expand the scope of a ProDeploy engagement leveraging Additional Deployment Time (ADT). ADT covers additional tasks above the normal deliverables of the ProDeploy offers. ADT can also be used as a standalone service without ProDeploy. SKUs are available for both Project Management and Technical Resource Expertise. SKUs are sold as blocks of four hours remote or eight hours onsite. The delivery team can assist in scoping the number of hours required for additional tasks.

Data Migration Services

Migrating data sets is no easy task. Our experts use proven tools and processes to streamline data migrations and avoid compromising data. A customer project manager works with our experienced team of experts to create a migration plan. Data migration is part of every technology upgrade, platform change, and shift to the cloud. You can rely on Dell data migration services to perform a seamless transition.

Residency Services

Certified technical professionals act like an extension of your IT staff to enhance internal capabilities and resources and help you realize faster adoption and maximized ROI of new technology. Residency Services help customers transition to new capabilities quickly by leveraging specific technology skill sets. Residency experts can provide post implementation management and knowledge transfer that is related to a new technology acquisition or day-to-day operational management of the IT infrastructure.

- Global experts available to serve in-person (onsite) or virtual (remote)
- Engagements starting at 2 weeks with flexibility to adjust

Unique Deployment Scenarios

Custom Deployment Services

When a deployment is beyond the scope of the ProDeploy Infrastructure Suite, you can turn to the custom deployment services team to address complex implementation scenarios and unique customer requirements. The Dell custom deployment team is staffed with solution architects who assist with customer scoping calls to define the project and develop the statement of work. Custom services can handle a wide range of deployments that can be performed in the factory or onsite. All custom engagement services are requested through SFDC.

ProDeploy FLEX

ProDeploy Flex is a new service and a powerful tool for you to attach more services and improve revenue and margins. The ProDeploy Flex modular offer allows sales teams to build and better tailor services by mixing factory and field delivery options. You can also select special deployment scenarios without going to the custom order desk. FLEX is ideal for unique deployments where ProDeploy or ProDeploy Plus are not an adequate answer to the customer needs.

Key features of ProDeploy FLEX

- Build deployment quotes using modular, selectable features for both hardware and software.
- The system automatically scales pricing based on volume.
- Ideal for customers who require NativeEdge Orchestrator or edge deployments
- Ability to add deployment services to third-party networking devices

Deployment of HPC

High-Performance Computing (HPC) implementations require specialists that understand advanced feature sets. Dell deploys the world's fastest systems and understands the nuances that make them perform. HPC deployments are most often scoped as custom service engagements, however we can do smaller HPC clusters under 300 nodes using a standard ProDeploy SKU. Any standard SKU for HPC deployment will be sold as one base SKU per cluster (ProDeploy for HPC Base) along with one ProDeploy for HPC Add-on for each device in the cluster (server nodes and switches).

- Scope of ProDeploy for HPC: *Available as standard SKUs in the US and Canada. Custom Service would be required for all other regions.

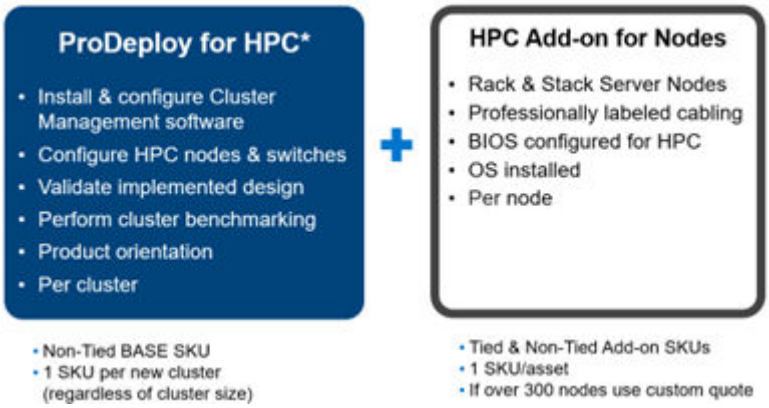

Figure 33. Standard deliverables of ProDeploy for HPC

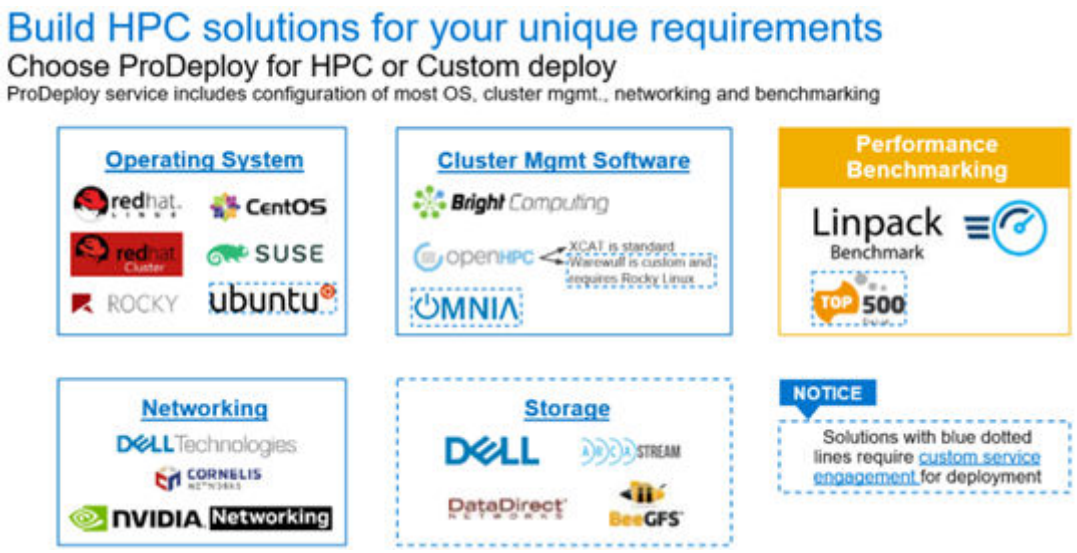

Figure 34. Visual view of HPC deployment options to include hardware and software

DAY 2 - Automation Services with Ansible

Dell solutions are built as "automation ready" with integrated APIs (Application Programming Interfaces) to allow customers to programmatically call actions on the product through code. Although Dell has published Anisble automation use cases, some customers need additional assistance with GitOps. By the end of the service, the customer will have the foundational components required to accelerate automation and understand how the programming works together: Day 1 and Day 2 use case automation scripts (ansible modules), CI/CD tool (Jenkins), and Version control (Git).

Consulting Services

Our expert consultants help customers transform faster, and quickly achieve business outcomes for the high value workloads Dell PowerEdge systems can handle. From strategy to full-scale implementation, Dell Technologies Consulting can help determine how to perform IT, workforce, or application transformation. We use prescriptive approaches and proven methodologies that are combined with portfolio and partner ecosystem of Dell Technologies to help achieve real business outcomes. We are here to help guide your next transformation that could address multi-cloud environments, business applications, DevOps, business resiliency, data center modernization, analytics, workforce collaboration, and user experiences.

Managed Services

Some customers prefer Dell to manage the complexity and risk of daily IT operations. Dell Managed Services utilizes proactive, artificial intelligence to improve operations and modern automation. This helps customers realize desired business outcomes from their infrastructure investments. With these technologies, our experts run, update, and fine-tune customer environments. You decide the service level requirements and we provide oversight of the environment. There are two types of managed service offers. First the outsourcing model, or CAPEX model, where Dell manages customer owned assets using our people and tools. The second is the "as-a-Service" model, or OPEX model, which we call APEX. In this service, Dell owns all technology and all the management of it. Many customers will have a blend of the two management types depending on the goals of the organization.



Figure 35. Dell Managed Services

- **Managed Detection and Response (MDR):** Dell Technologies Managed Detection and Response (MDR) is powered by Secureworks Taegis XDR software platform. MDR is a managed service that secures the customer's IT environment against malicious actors and provides remediation if and when a threat is identified. When a customer purchases MDR, they will receive the following features from our team:
  - Dell badge resources
  - Agent rollout assistance to help deploy the Secureworks Endpoint Agent.
  - 24x7 threat detection and investigation
  - Up to 40 hrs per quarter of response and active remediation activities
  - If the customer experiences a breach, we will provide up to 40 hrs per year of Cyber incident response initiation.
  - Quarterly reviews with the customer to review the data

Education Services

Build the IT skills required to influence the transformational outcomes of the business. Enable talent and empower teams with the right skills to lead and perform transformational strategy that drives competitive advantage. Leverage the training and certification required for real transformation.

Dell Technologies Education Services offers PowerEdge server training and certifications that are designed to help customers achieve more from their hardware investment. The curriculum delivers the information and the practical, firsthand skills that their team must confidently install, configure, manage, and troubleshoot Dell servers.

To learn more or register for a class today, see Education.Dell.com

Resources

Services for PowerEdge.

14

Appendix A: Additional specifications

Topics:

- Chassis dimension
- Chassis weight
- NIC port specifications
- Video specifications
- USB ports specifications
- PSU rating
- Environmental specifications

Chassis dimension

The R760xa has the following dimensions:

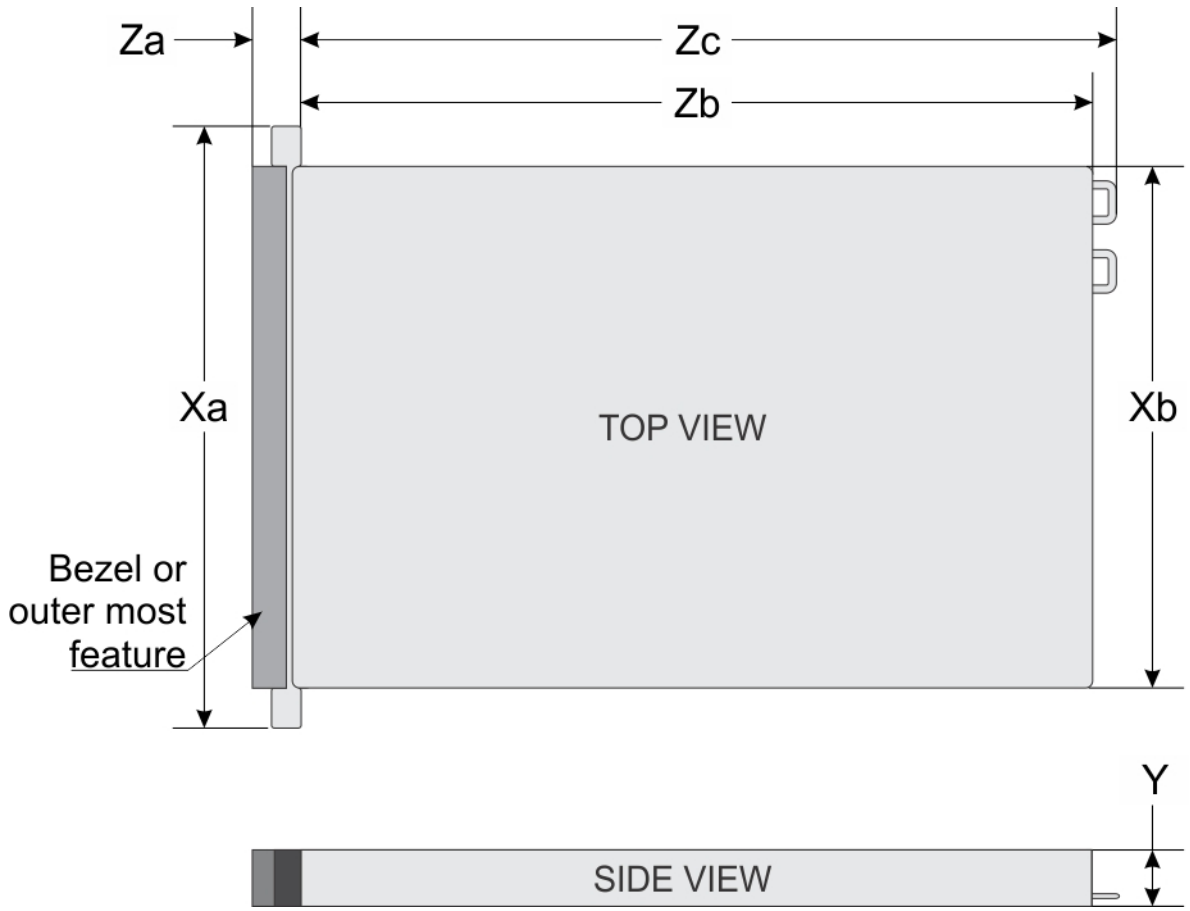

Figure 36. Chassis dimensions

Table 27. Chassis dimensions

Model number	Xa	Xb	Y	Za with bezel	Za without bezel	Zb	Zc	Max Sys Wgt	Chassis
R760xa	482.0 mm (18.97 inches)	434.0 mm (17 inches)	86.8 mm (3.41 inches)	35.84 mm (1.41 inches)	22.0 mm (0.86 inches)	875.3 mm (34.46 inches)	910.89mm (35.86 inches)	27.5 Kg (60.63 lbs)	2U

Chassis weight

Table 28. Chassis weight

System Configuration	Maximum Weight
A server with fully populated drives	27.5 kg (60.63 lbs)
A server without drives and PSU installed	25.1 kg (55.33 lbs)

NIC port specifications

The PowerEdge R760xa system supports up to two 10/100/1000 Mbps Network Interface Controller (NIC) ports embedded on the LAN on Motherboard (LOM) and integrated on the optional Open Compute Project (OCP) card.

Table 29. NIC port specification for the system

Feature	Specifications
LOM card (optional)	1 GbE x 2
OCP card (OCP 3.0) (optional)	1 GbE x 4, 10 GbE x 2, 10 GbE x 4, 25 GbE x 2, 25 GbE x 4, 100 GbE x 2

NOTE: The system should have either LOM card or an OCP card that is installed in the system.

NOTE: On the system board, the supported OCP PCIe width is x8; the supported OCP PCIe width can be extended to x16 with optional OCP cable.

Video specifications

The PowerEdge R760xa system supports integrated Matrox G200 graphics controller with 16 MB of video frame buffer.

Table 30. Video specifications for R760xa

Resolution	Refresh rate (Hz)	Color depth (bits)
1024 x 768	60	8, 16, 32
1280 x 800	60	8, 16, 32
1280 x 1024	60	8, 16, 32
1360 x 768	60	8, 16, 32
1440 x 900	60	8, 16, 32
1600 x 900	60	8, 16, 32
1600 x 1200	60	8, 16, 32
1680 x 1050	60	8, 16, 32

Table 30. Video specifications for R760xa (continued)

Resolution	Refresh rate (Hz)	Color depth (bits)
1920 x 1080	60	8, 16, 32
1920 x 1200	60	8, 16, 32

USB ports specifications

Table 31. PowerEdge R760xa USB specifications

Front		Rear		Internal (Optional)	
USB port type	**No. of ports**	**USB port type**	**No. of ports**	**USB port type**	**No. of ports**
USB 2.0-compliant port	One	USB 3.0-compliant port	One	Internal USB 3.0-compliant port	One
iDRAC Direct port (Micro-AB USB 2.0-compliant port)	One	USB 2.0-compliant port	One		

NOTE: The micro USB 2.0 compliant port can only be used as an iDRAC Direct or a management port.

PSU rating

Below table lists the power capacity the PSUs in high/low line operation mode.

Table 32. PSUs highline and lowline ratings

—	2400 W Platinum	2800 W Titanium	3200 W Titanium
Peak Power (Highline/-72 VDC)	4080 W	4760 W	5440 W
Highline/-72 VDC	2400 W	2800 W	3200 W
Peak Power (Lowline/-40 VDC)	2380 W	N/A	N/A
Lowline/-40 VDC	1400 W	N/A	N/A
Highline 240 VDC	2400 W	2800 W	3200 W
DC-48-60 V	N/A	N/A	N/A

The PowerEdge R760xa supports up to two AC power supplies with 1+1 redundancy, autosensing, and auto switching capability.

If two PSUs are present during POST, a comparison is made between the wattage capacities of the PSUs. In case the PSU wattages do not match, the larger of the two PSUs is enabled. Also, there is a PSU mismatch warning that is displayed in BIOS, iDRAC, or on the system LCD.

If a second PSU is added at run-time, in order for that particular PSU to be enabled, the wattage capacity of the first PSU must equal the second PSU. Otherwise, the PSU is flagged as unmatched in iDRAC and the second PSU is not enabled.

Dell PSUs have achieved Platinum efficiency levels as shown in the table below.

Table 33. PSU efficiency level

Efficiency Targets by Load						
Form factor	**Output**	**Class**	**10%**	**20%**	**50%**	**100%**
Redundant 86 mm	2400 W mixed mode	Platinum	89.00%	93.00%	94.00%	91.50%

Table 33. PSU efficiency level (continued)

Efficiency Targets by Load						
Form factor	**Output**	**Class**	**10%**	**20%**	**50%**	**100%**
	2800 W mixed mode	Titanium	90.00%	94.00%	96.00%	94.00%
	3200 W mixed mode	Titanium	90.00%	94.00%	96.00%	91.00%

Environmental specifications

NOTE: For additional information about environmental certifications, refer to the *Product Environmental Datasheet* located with the *Documentation* on Dell Support.

Table 34. Continuous Operation Specifications for ASHRAE A2

Temperature	Specifications
Allowable continuous operations	
Temperature range for altitudes <= 900 m (<= 2953 ft)	10–35°C (50–95°F) with no direct sunlight on the equipment
Humidity percent range (non-condensing at all times)	8% RH with -12°C (10.4°F) minimum dew point to 80% RH with 21°C (69.8°F) maximum dew point
Operational altitude de-rating	Maximum temperature is reduced by 1°C/300 m (1.8°F/984 Ft) above 900 m (2953 Ft)

Table 35. Continuous Operation Specifications for ASHRAE A3

Temperature	Specifications
Allowable continuous operations	
Temperature range for altitudes <= 900 m (<= 2953 ft)	5–40°C (41–104°F) with no direct sunlight on the equipment
Humidity percent range (non-condensing at all times)	8% RH with -12°C (10.4°F) minimum dew point to 85% RH with 24°C (75.2°F) maximum dew point
Operational altitude de-rating	Maximum temperature is reduced by 1°C/175 m (1.8°F/574 Ft) above 900 m (2953 Ft)

Table 36. Continuous Operation Specifications for ASHRAE A4

Temperature	Specifications
Allowable continuous operations	
Temperature range for altitudes <= 900 m (<= 2953 ft)	5–45°C (41–113°F) with no direct sunlight on the equipment
Humidity percent range (non-condensing at all times)	8% RH with -12°C (10.4°F) minimum dew point to 90% RH with 24°C (75.2°F) maximum dew point
Operational altitude de-rating	Maximum temperature is reduced by 1°C/125 m (1.8°F/410 Ft) above 900 m (2953 Ft)

Table 37. Common Environmental Specifications for ASHRAE A2, A3 and A4

Allowable continuous operations	
Maximum temperature gradient (applies to both operation and non-operation)	20°C in an hour* (36°F in an hour) and 5°C in 15 minutes (9°F in 15 minutes), 5°C in an hour* (9°F in an hour) for tape

Table 37. Common Environmental Specifications for ASHRAE A2, A3 and A4 (continued)

Allowable continuous operations	
	NOTE: * - Per ASHRAE thermal guidelines for tape hardware, these are not instantaneous rates of temperature change.
Non-operational temperature limits	-40 to 65°C (-40 to 149°F)
Non-operational humidity limits	5% to 95% RH with 27°C (80.6°F) maximum dew point
Maximum non-operational altitude	12,000 meters (39,370 feet)
Maximum operational altitude	3,050 meters (10,006 feet)

Table 38. Maximum vibration specifications

Maximum vibration	**Specifications**
Operating	0.21 G_{rms} at 5 Hz to 500 Hz for 10 minutes (all operation orientations)
Storage	1.88 G_{rms} at 10 Hz to 500 Hz for 15 minutes (all six sides tested)

Table 39. Maximum shock pulse specifications

Maximum shock pulse	**Specifications**
Operating	Six consecutively executed shock pulses in the positive and negative x, y, and z axis of 6 G for up to 11 ms.
Storage	Six consecutively executed shock pulses in the positive and negative x, y, and z axis (one pulse on each side of the system) of 71 G for up to 2 ms.

Thermal air restrictions

ASHRAE A2 environment

- Processors > 350 W are not supported
- 8470Q and 6458Q 350 W Processors are not supported
- Maximum 30° C (86°F) for GPU > 350 W With Processor > 225 W

ASHRAE A3 environment

- Processors > 225 W are not supported
- GPUs at rear slots are not supported
- Nvidia A2 GPU and Intel ATS-M75 GPU are supported at the front slots. Other GPUs are not supported
- 96 GB or greater capacity RDIMMs are not supported
- Two power supplies are required. System performance may be reduced in the event of a PSU failure
- Non-Dell qualified peripheral cards and/or peripheral cards greater than 25 W are not supported
- 85°C (185°F) active optics cable is required

ASHRAE A4 environment

- Processors > 185 W are not supported
- GPUs at rear slots are not supported
- Nvidia A2 GPU and Intel ATS-M75 GPU are supported at the front slots. Other GPUs are not supported
- 96 GB or greater capacity RDIMMs are not supported
- 2.5-inch NVMe storages are not supported
- BOSS-N1 is not supported
- Two power supplies are required. System performance may be reduced in the event of a PSU failure
- Non-Dell qualified peripheral cards and/or peripheral cards greater than 25 W are not supported

- OCP cards 3.0 are not supported
- 85°C (185°F) active optics cable is required

Liquid cooling restrictions

ASHRAE A3 environment

- GPUs at rear slots are not supported
- Nvidia A2 GPU and Intel ATS-M75 GPU are supported at the front slots. Other GPUs are not supported
- 96 GB or greater capacity RDIMMs are not supported
- Two power supplies are required. System performance may be reduced in the event of a PSU failure
- Non-Dell qualified peripheral cards and/or peripheral cards greater than 25 W are not supported
- 85°C (185°F) active optics cable is required

ASHRAE A4 environment

- GPUs at rear slots are not supported
- Nvidia A2 GPU and Intel ATS-M75 GPU are supported at the front slots. Other GPUs are not supported
- 96 GB or greater capacity RDIMMs are not supported
- 2.5-inch NVMe storage are not supported
- BOSS-N1 is not supported
- Two power supplies are required. System performance may be reduced in the event of a PSU failure
- Non-Dell qualified peripheral cards and/or peripheral cards greater than 25 W are not supported
- OCP cards 3.0 are not supported
- 85°C (185°F) active optics cable is required

Thermal restriction matrix

Table 40. References used in the restriction table.

Label	Description
STD	Standard
HSK	Heat sink
LP	Low Profile
FH	Full Height

Table 41. Thermal restriction matrix

Configuration		**-**	**Ambient temperature**
Front GPU TDP		**<=350 W**	
Front drives		**8x 2.5" SAS/SATA/NVMe**	
CPU TDP/ cTDP	125 W	System Fan (60 x 76 mm) with 2U HPR HSK	35°C (95°F)
	150 W		
	165 W		
	185 W		
	195 W		
	205 W		
	225 W		

Table 41. Thermal restriction matrix (continued)

Configuration		-	Ambient temperature
Front GPU TDP		**<=350 W**	
Front drives		**8x 2.5" SAS/SATA/NVMe**	
	250 W		
	270 W		
	300 W		
	330 W		
	350 W		

NOTE: The PowerEdge R760xa system supports all CPU SKUs at 35°C (95°F) except 8470Q and 6458Q 350 W CPUs that require liquid cooling support.

NOTE: There is only one type of fan supported in R760xa. Six fans are required to be installed for all R760xa system configurations.

NOTE: Fan type supported: STD

NOTE: 96 GB DIMM supports:

2DPC up to 30°C with GPU equal or lower than 250 W

1DPC up to 35°C with GPU greater than 250 W.

15

Appendix A. Standards compliance

The system conforms to the following industry standards.

Table 42. Industry standard documents

Standard	URL for information and specifications
ACPIAdvance Configuration and Power Interface Specification, v6.4	Uefi specifications and tools
Ethernet IEEE Std 802.3-2022	ieee standards
MSFT WHQL Microsoft Windows Hardware Quality Labs	microsoft.com/whdc/system/platform/pcdesign/desguide/serverdg.mspx
IPMI Intelligent Platform Management Interface, v2.0	intel.com/design/servers/ipmi
DDR5 Memory DDR5 SDRAM Specification	jedec.org/standards-documents/docs/jesd79-4.pdf
PCI Express PCI Express Base Specification, v5.0	pcisig.com/specifications/pciexpress
PMBus Power System Management Protocol Specification, v1.2	pmbus specification and revisions
SAS Serial Attached SCSI, 3 (SAS-3) (T10/INCITS 519)	SCSI storage interfaces information
SATA Serial ATA Rev. 3.3	sata-io.org page
SMBIOS System Management BIOS Reference Specification, v3.3.0	BIOS reference specification page
TPM Trusted Platform Module Specification, v1.2 and v2.0	trustedcomputinggroup org page
UEFI Unified Extensible Firmware Interface Specification, v2.7	UEFIF specifications
PI Platform Initialization Specification, v1.7	
USB Universal Serial Bus v2.0 and SuperSpeed v3.0 (USB 3.1 Gen1)	USB Implementers Forum, Inc. USB document library
NVMe Express Base Specification. Revision 2.0c	NVME specifications
NVMe Command Set Specifications 1. NVM Express NVM Command Set Specification. Revision 1.1c 2. NVM Express Zoned Namespaces Command Set. Revision 1.0c 3. NVM Express® Key Value Command Set. Revision 1.0c	
NVMe Transport Specifications 1. NVM Express over PCIe Transport. Revision 1.0c 2. NVM Express RDMA Transport Revision. 1.0b 3. NVM Express TCP Transport. Revision 1.0c	
NVMe NVM Express Management Interface. Revision 1.2c	
NVMe NVMe Boot Specification. Revision 1.0	

16

Appendix C Additional resources

Table 43. Additional resources

Resource	Description of contents	Location
Installation and Service Manual	This manual, available in PDF format, provides the following information: • Chassis features • System Setup program • System indicator codes • System BIOS • Remove and replace procedures • Diagnostics • Jumpers and connectors	Dell.com/Support/Manuals
Getting Started Guide	This guide ships with the system, and is also available in PDF format. This guide provides the following information: • Initial setup steps	Dell.com/Support/Manuals
Rack Installation Guide	This document ships with the rack kits, and provides instructions for installing a server in a rack.	Dell.com/Support/Manuals
System Information Label	The system information label documents the system board layout and system jumper settings. Text is minimized due to space limitations and translation considerations. The label size is standardized across platforms.	Inside the system chassis cover
Quick Resource Locator (QRL)	This code on the chassis can be scanned by a phone application to access additional information and resources for the server, including videos, reference materials, service tag information, and Dell contact information.	Inside the system chassis cover
Enterprise Infrastructure Planning Tool (EIPT)	The Dell online EIPT enables easier and more meaningful estimates to help you determine the most efficient configuration possible. Use EIPT to calculate the power consumption of your hardware, power infrastructure, and storage.	Dell.com/calc